Samsung

ARTIK™ Modules

0

030 Data Sheet

Samsung ARTIK™ Modules

ARTIK 030 Mesh Networking Module Data Sheet

The ARTIK 030 is a fully-integrated, pre-certified module, enabling rapid development of wireless mesh networking solutions. The ARTIK 030 combines an energy-efficient, multi-protocol wireless SoC with a proven RF/antenna design and industry-leading wireless software stacks. This integration accelerates time-to-market and saves months of engineering effort and development costs.

ARTIK 030 can be used in a wide variety of applications:

- Connected Home
- Building Automation
- Lighting
- Security and Monitoring
- Smart Grid / Metering
- Industrial Automation
- Others

KEY FEATURES

- Industry-leading mesh networking (ZigBee/ Thread) software and development tools
- Antenna: internal chip and U.FL variants
- TX power: up to +10 dBm
- RX sensitivity: down to -99 dBm
- 32-bit ARM® Cortex®-M4 at 40 MHz
- Flash memory: 256 kB
- RAM: 32 kB
- Autonomous Hardware Crypto Accelerator and Random Number Generator
- Integrated DC-DC Converter

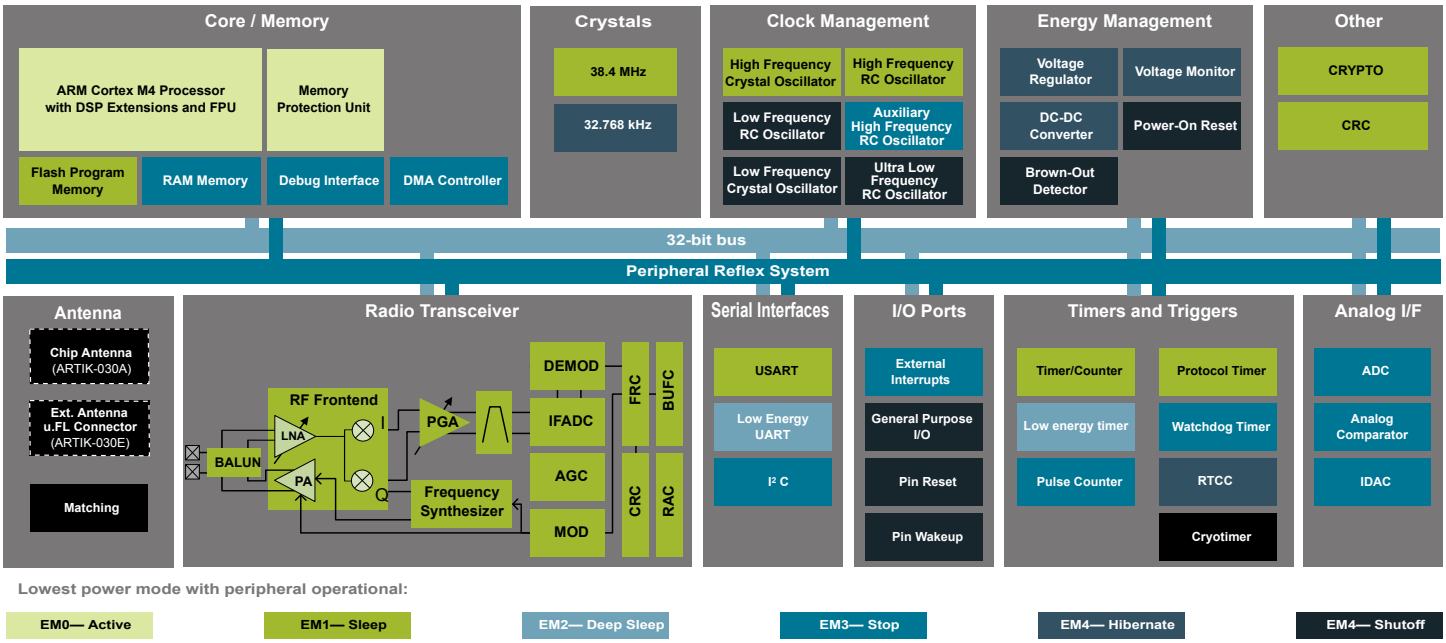

This information applies to a product under development. Its characteristics and specifications are subject to change without notice.

Table of Contents

1. Feature List . . . 1

2. Ordering Information . . . 2

3. System Overview . . . 3

3.1 Introduction . . . 3

3.2 Radio . . . 3
3.2.1 Antenna Interface . . . 3
3.2.2 Packet and State Trace . . . 4
3.2.3 Random Number Generator . . . 4

3.3 Power . . . 5
3.3.1 Energy Management Unit (EMU) . . . 5
3.3.2 DC-DC Converter . . . 5

3.4 General Purpose Input/Output (GPIO) . . . 6

3.5 Clocking . . . 6
3.5.1 Clock Management Unit (CMU) . . . 6
3.5.2 Internal Oscillators . . . 6

3.6 Counters/Timers and PWM . . . 6
3.6.1 Timer/Counter (TIMER) . . . 6
3.6.2 Real Time Counter and Calendar (RTCC) . . . 6
3.6.3 Low Energy Timer (LETIMER) . . . 6
3.6.4 Ultra Low Power Wake-up Timer (CRYOTIMER) . . . 7
3.6.5 Pulse Counter (PCNT) . . . 7
3.6.6 Watchdog Timer (WDOG) . . . 7

3.7 Communications and Other Digital Peripherals . . . 7
3.7.1 Universal Synchronous/Asynchronous Receiver/Transmitter (USART) . . . 7
3.7.2 Low Energy Universal Asynchronous Receiver/Transmitter (LEUART) . . . 7
3.7.3 Inter-Integrated Circuit Interface (I^2C) . . . 7
3.7.4 Peripheral Reflex System (PRS) . . . 7

3.8 Security Features . . . 7
3.8.1 GPCRC (General Purpose Cyclic Redundancy Check) . . . 7
3.8.2 Crypto Accelerator (CRYPTO) . . . 8

3.9 Analog . . . 8
3.9.1 Analog Port (APORT) . . . 8
3.9.2 Analog Comparator (ACMP) . . . 8
3.9.3 Analog to Digital Converter (ADC) . . . 8
3.9.4 Digital to Analog Current Converter (IDAC) . . . 8

3.10 Reset Management Unit (RMU) . . . 8

3.11 Core and Memory . . . 8
3.11.1 Processor Core . . . 8
3.11.2 Memory System Controller (MSC) . . . 9
3.11.3 Linked Direct Memory Access Controller (LDMA) . . . 9

3.12 Memory Map . . . 10

3.13 Configuration Summary . . . 11

4. Electrical Specifications . . . 12
4.1 Electrical Characteristics . . . 12
4.1.1 Absolute Maximum Ratings . . . 12
4.1.2 General Operating Conditions . . . 13
4.1.3 DC-DC Converter . . . 14
4.1.4 Current Consumption . . . 15
4.1.4.1 Current Consumption 3.3 V using DC-DC Converter . . . 15
4.1.4.2 Current Consumption Using Radio . . . 16
4.1.5 Wake up times . . . 16
4.1.6 Brown Out Detector . . . 17
4.1.7 Frequency Synthesizer Characteristics . . . 17
4.1.8 2.4 GHz RF Transceiver Characteristics . . . 18
4.1.8.1 RF Transmitter General Characteristics for the 2.4 GHz Band . . . 18
4.1.8.2 RF Receiver General Characteristics for the 2.4 GHz Band . . . 18
4.1.8.3 RF Receiver Characteristics for 802.15.4 O-QPSK DSSS in the 2.4 GHz Band . . . 19
4.1.9 Oscillators . . . 21
4.1.9.1 LFXO . . . 21
4.1.9.2 HFXO . . . 21
4.1.9.3 LFRCO . . . 21
4.1.9.4 HFRCO and AUXHFRCO . . . 22
4.1.9.5 ULFRCO . . . 22
4.1.10 Flash Memory Characteristics . . . 23
4.1.11 GPIO . . . 24
4.1.12 VMON . . . 25
4.1.13 ADC . . . 26
4.1.14 IDAC . . . 29
4.1.15 Analog Comparator (ACMP) . . . 31
4.1.16 I2C . . . 33
4.1.17 USART SPI . . . 35

5. Typical Connection Diagrams . . . 37
5.1 Network Co-Processor (NCP) Application with UART Host . . . 37
5.2 Network Co-Processor (NCP) Application with SPI Host . . . 37
5.3 SoC Application . . . 38

6. Layout Guidelines . . . 39
6.1 Module Placement and Application PCB Layout Guidelines . . . 39
6.2 Effect of Plastic and Metal Materials . . . 40
6.3 Locating the Module Close to Human Body . . . 40
6.4 2D Radiation Pattern Plots . . . 41

7. Hardware Design Guidelines . . . 43
7.1 Power Supply Requirements . . . 43
7.2 Reset Functions . . . 43
7.3 Debug and Firmware Updates . . . 43
7.3.1 JTAG . . . 43
7.3.2 Packet Trace Interface (PTI) . . . 43

8. Pin Definitions 44

8.1 Pin Definitions 44

8.1.1 GPIO Overview. 53

8.2 Alternate Functionality Pinout 54

8.3 Analog Port (APORT) 60

9. Package Specifications 68

9.1 ARTIK 030 Dimensions. 68

9.2 ARTIK 030 Module Footprint 68

9.3 ARTIK 030 Recommended PCB Land Pattern 69

9.4 ARTIK 030 Package Marking. 70

10. Tape and Reel Specifications 72

10.1 Tape and Reel Packaging 72

10.2 Reel Material and Dimensions 72

10.3 Module Orientation and Tape Feed 73

10.4 Tape and Reel Box Dimensions 74

10.5 Moisture Sensitivity Level 74

11. Certifications 75

12. Revision History. 76

12.1 Revision 0.5 76

1. Feature List

MCU Features

- ARM Cortex®-M4 + Floating Point Unit
- Up to 40 MHz Clock Speed
- Low Active Mode Current: 63 µA/MHz
- 256 kB flash, 32 kB SRAM
- Advanced hardware cryptographic engine with support for AES-128/-256, ECC, SHA-1, SHA-256, and a Random Number Generator
- 8 Channel DMA Controller

Digital Peripherals

- 2 x USART (UART, SPI, IrDA, I^2S)
- Low Energy UART (LEUART™)
- I^2C peripheral interface (address recognition down to EM3)
- Timers: RTCC, Low Energy Timer, Pulse Counter
- 12-channel Peripheral Reflex System (PRS)
- Up to 25 GPIO with interrupts

Analog Peripherals

- ADC (12-bit, 1 Msps, 326 µA)
- Current-mode Digital to Analog Converter (IDAC)
- 2 x Analog Comparator (ACMP)

Energy Efficient Low Power Modes

- Energy Mode 2 (Deep Sleep) Current: 2.5 µA

  (Full RAM retention and RTCC running from LXFO)
- Ultra-fast wake up: 3 µS down to EM3
- Wide Supply Voltage range of 1.85 to 3.8 V

Environmental & Regulatory

- Operating Temperature: -40 to +85°C
- FCC, IC, CE, Aus/NZ, Korea certifications (pending)

Dimensions

- W x L x H: 12.9 x 15.0 x 2.2 mm

Radio Features

- 2.4 GHz with integrated balun
- Support for wireless mesh networking (ZigBee/Thread)
- Integrated PA (up to +10 dBm TX power)
- Packet Trace Interface (PTI) for non-intrusive packet trace with Simplicity Studio development tools
- Antenna interface: integrated high-performance chip antenna or u.FL variant for external antenna

ZigBee and Thread Features

- IEEE 802.15.4
- Data Rate / Modulation: 250 kbps DSSS-OQPSK
- +10 dBm Programmable TX Power
- -99 dBm RX Sensitivity
- 9.8 mA RX current
- 8.2 mA TX current (at +0 dBm)
- Support for SoC and Network Co-Processor (NCP) architectures with SPI/UART host support
- Serial and Over-The-Air (OTA) bootloaders

2. Ordering Information

Ordering Code	Description	Max TX Power	Antenna	Packaging	Production Status
ARTIK-030-AV1	ARTIK 030 Mesh Networking Module	+10 dBm	Integrated chip antenna	Cut Reel (100 pcs)	Initial Production / Engineering Samples (non-certified)
ARTIK-030-AV1R	ARTIK 030 Mesh Networking Module	+10 dBm	Integrated chip antenna	Reel (1000 pcs)	Initial Production / Engineering Samples (non-certified)
ARTIK-030-EV1	ARTIK 030 Mesh Networking Module	+10 dBm	External (U.FL)	Cut Reel (100 pcs)	Initial Production / Engineering Samples (non-certified) [1]
ARTIK-030-EV1R	ARTIK 030 Mesh Networking Module	+10 dBm	External (U.FL)	Reel (1000 pcs)	Initial Production / Engineering Samples (non-certified) [1]
ARTIK-030-AV2	ARTIK 030 Mesh Networking Module	+10 dBm	Integrated chip antenna	Cut Reel (100 pcs)	Full Production (certified) [1]
ARTIK-030-AV2R	ARTIK 030 Mesh Networking Module	+10 dBm	Integrated chip antenna	Reel (1000 pcs)	Full Production (certified) [1]
ARTIK-030-EV2	ARTIK 030 Mesh Networking Module	+10 dBm	External (U.FL)	Cut Reel (100 pcs)	Full Production (certified) [1]
ARTIK-030-EV2R	ARTIK 030 Mesh Networking Module	+10 dBm	External (U.FL)	Reel (1000 pcs)	Full Production (certified) [1]
SIP-KITSZG001	ARTIK 030 Mesh Networking Kit (includes 3 x ARTIK-030-A development boards)	—	—	Development Kit	—

Note:

1. Contact sales@artik.io for availability and certification timelines.
2. ARTIK 030 development kit and IAR license required for ZigBee® and Thread software development.

3. System Overview

3.1 Introduction

This section provides a brief overview of the ARTIK 030 module architecture including both MCU and RF sub-systems. A detailed functional description of the Silicon Lab's EFR32MG1 SoC used inside the module is available in the *EFR32MG1 Mighty Gecko Datasheet* and *EFR32xG1 Wireless Gecko Reference Manual* and a block diagram of the EFR32MG1 SoC is shown in the figure below.

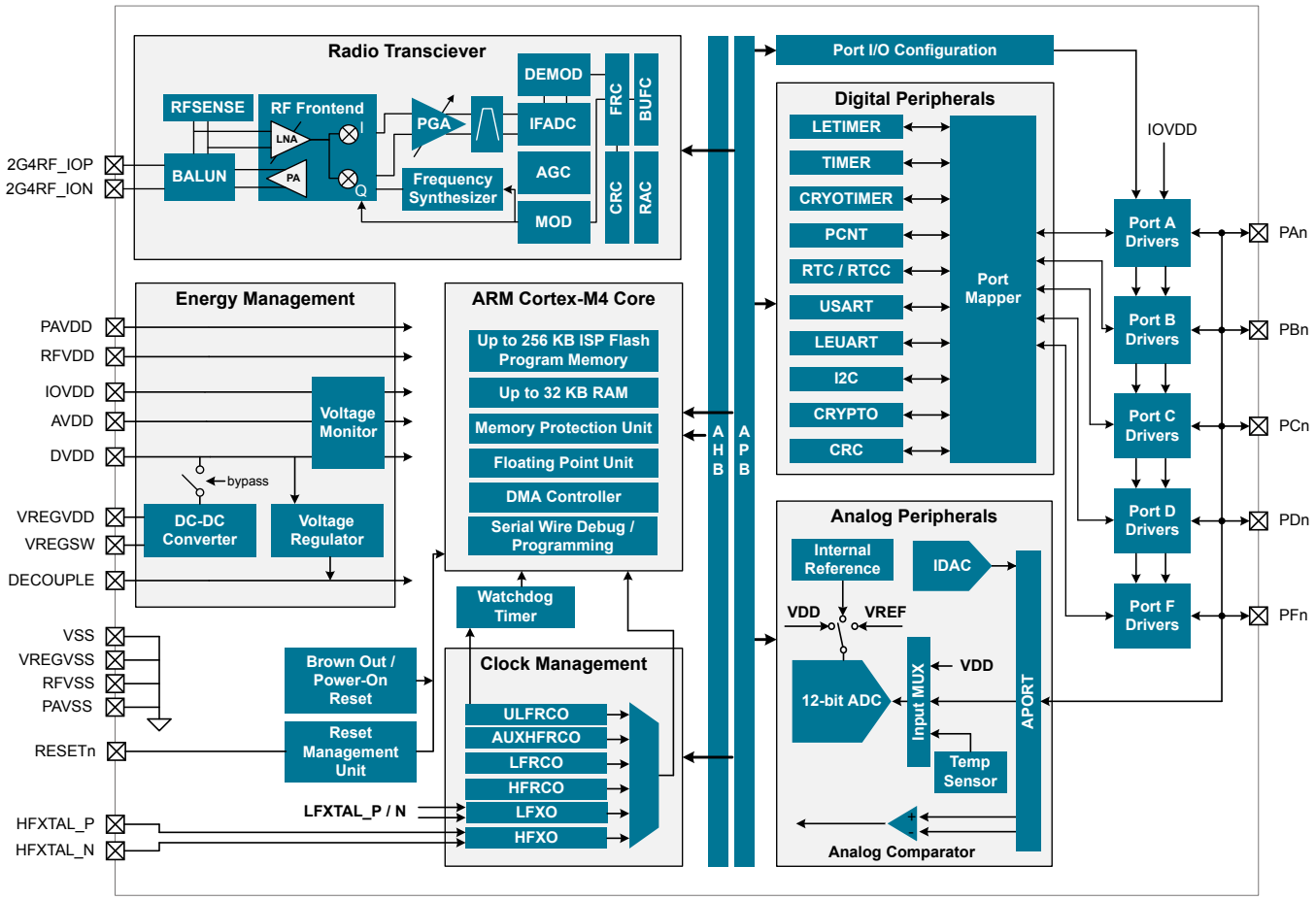

Figure 3.1. Detailed EFR32MG1 Block Diagram

3.2 Radio

The ARTIK 030 features a flexible, multi-protocol radio that supports wireless mesh networking (ZigBee® / Thread) protocols.

3.2.1 Antenna Interface

The ARTIK 030 module family includes options for either a high-performance, integrated chip-antenna (ARTIK-030-A) or external antenna (ARTIK-030-E) via a U.FL connector. The table below includes performance specifications for the integrated chip antenna.

Table 3.1. Antenna Efficiency and Peak Gain (ARTIK-030-A)

Parameter	With optimal layout	Note
Efficiency	-2 dB to -3 dB	Antenna efficiency, gain and radiation pattern are highly dependent on the application PCB layout and mechanical design. Refer to Chapter 6. Layout Guidelines for PCB layout and antenna integration guidelines for optimal performance.
Peak gain	1.0 dBi	

3.2.2 Packet and State Trace

The ARTIK 030 Frame Controller has a packet and state trace unit that provides valuable information during the development phase. It features:

- Non-intrusive trace of transmit data, receive data and state information
- Data observability on a single-pin UART data output, or on a two-pin SPI data output
- Configurable data output bitrate / baudrate
- Multiplexed transmitted data, received data and state / meta information in a single serial data stream

3.2.3 Random Number Generator

The Frame Controller (FRC) implements a random number generator that uses entropy gathered from noise in the RF receive chain. The data is suitable for use in cryptographic applications.

Output from the random number generator can be used either directly or as a seed or entropy source for software-based random number generator algorithms such as Fortuna.

3.3 Power

The ARTIK 030 has an Energy Management Unit (EMU) and efficient integrated regulators to generate internal supply voltages. Only a single external supply voltage is required, from which all internal voltages are created. An integrated DC-DC buck regulator is utilized to further reduce the current consumption.

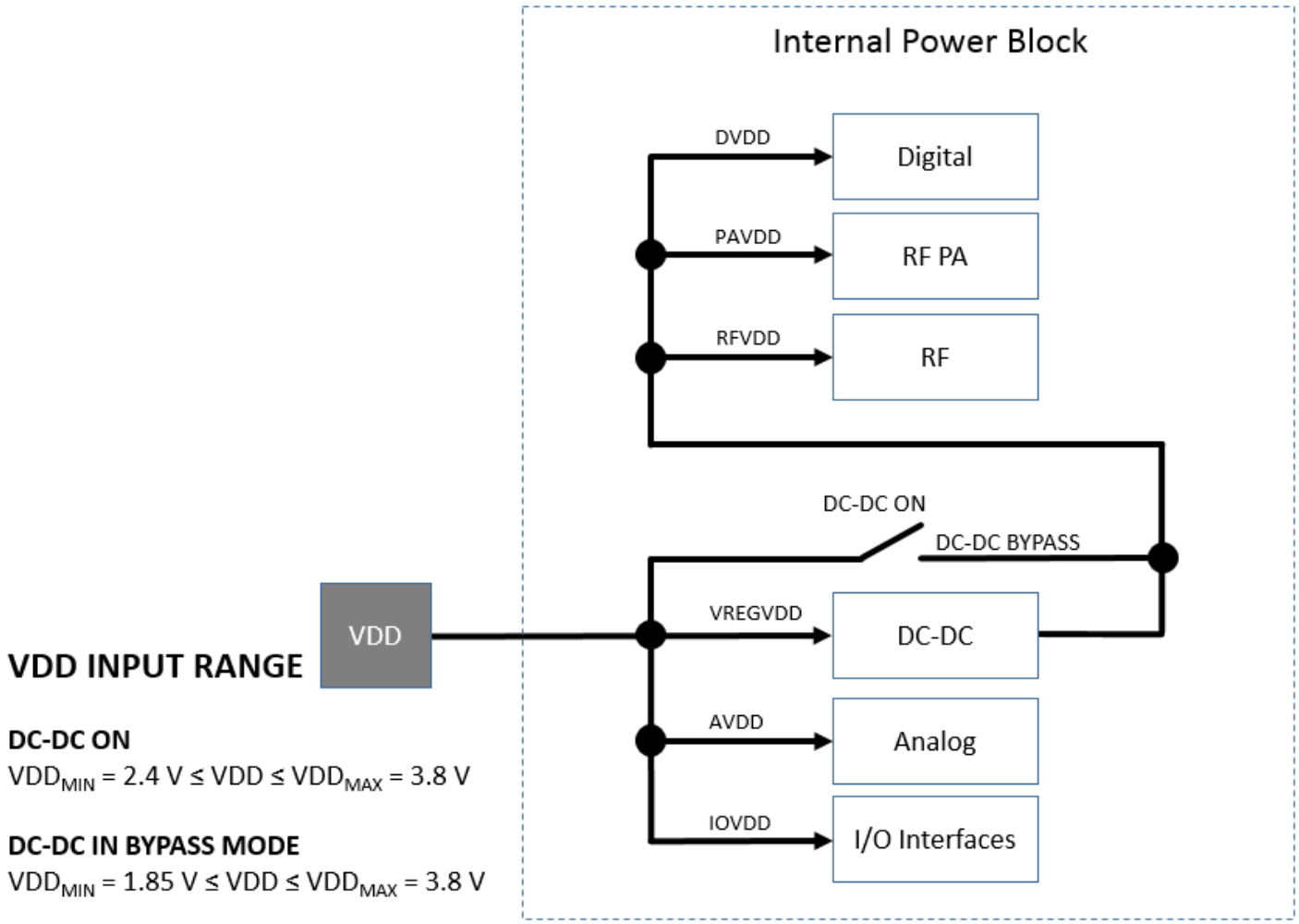

Figure 3.2. ARTIK 030 Power Block

3.3.1 Energy Management Unit (EMU)

The Energy Management Unit manages transitions of energy modes in the device. Each energy mode defines which peripherals and features are available and the amount of current the device consumes. The EMU can also be used to turn off the power to unused RAM blocks, and it contains control registers for the dc-dc regulator and the Voltage Monitor (VMON). The VMON is used to monitor multiple supply voltages. It has multiple channels which can be programmed individually by the user to determine if a sensed supply has fallen below a chosen threshold.

3.3.2 DC-DC Converter

The DC-DC buck converter covers a wide range of load currents and provides up to 90% efficiency in energy modes EM0, EM1, EM2 and EM3. Patented RF noise mitigation allows operation of the DC-DC converter without degrading sensitivity of radio components. Protection features include programmable current limiting, short-circuit protection, and dead-time protection. The DC-DC converter may also enter bypass mode when the input voltage is too low for efficient operation. In bypass mode, the DC-DC input supply is internally connected directly to its output through a low resistance switch. Bypass mode also supports in-rush current limiting to prevent input supply voltage droops due to excessive output current transients.

3.4 General Purpose Input/Output (GPIO)

ARTIK 030 has up to 25 General Purpose Input/Output pins. Each GPIO pin can be individually configured as either an output or input. More advanced configurations including open-drain, open-source, and glitch-filtering can be configured for each individual GPIO pin. The GPIO pins can be overridden by peripheral connections, like SPI communication. Each peripheral connection can be routed to several GPIO pins on the device. The input value of a GPIO pin can be routed through the Peripheral Reflex System to other peripherals. The GPIO subsystem supports asynchronous external pin interrupts.

3.5 Clocking

3.5.1 Clock Management Unit (CMU)

The Clock Management Unit controls oscillators and clocks in the ARTIK 030. Individual enabling and disabling of clocks to all peripheral modules is perfomed by the CMU. The CMU also controls enabling and configuration of the oscillators. A high degree of flexibility allows software to optimize energy consumption in any specific application by minimizing power dissipation in unused peripherals and oscillators.

3.5.2 Internal Oscillators

The ARTIK 030 fully integrates two crystal oscillators and four RC oscillators, listed below.

- A 38.4MHz high frequency crystal oscillator (HFXO) provides a precise timing reference for the MCU and radio.
- A 32.768 kHz crystal oscillator (LFXO) provides an accurate timing reference for low energy modes.
- An integrated high frequency RC oscillator (HFRCO) is available for the MCU system, when crystal accuracy is not required. The HFRCO employs fast startup at minimal energy consumption combined with a wide frequency range.
- An integrated auxilliary high frequency RC oscillator (AUXHFRCO) is available for timing the general-purpose ADC and the Serial Wire debug port with a wide frequency range.
- An integrated low frequency 32.768 kHz RC oscillator (LFRCO) can be used as a timing reference in low energy modes, when crystal accuracy is not required.
- An integrated ultra-low frequency 1 kHz RC oscillator (ULFRCO) is available to provide a timing reference at the lowest energy consumption in low energy modes.

3.6 Counters/Timers and PWM

3.6.1 Timer/Counter (TIMER)

TIMER peripherals keep track of timing, count events, generate PWM outputs and trigger timed actions in other peripherals through the PRS system. The core of each TIMER is a 16-bit counter with up to 4 compare/capture channels. Each channel is configurable in one of three modes. In capture mode, the counter state is stored in a buffer at a selected input event. In compare mode, the channel output reflects the comparison of the counter to a programmed threshold value. In PWM mode, the TIMER supports generation of pulse-width modulation (PWM) outputs of arbitrary waveforms defined by the sequence of values written to the compare registers, with optional dead-time insertion available in timer unit TIMER_0 only.

3.6.2 Real Time Counter and Calendar (RTCC)

The Real Time Counter and Calendar (RTCC) is a 32-bit counter providing timekeeping in all energy modes. The RTCC includes a Binary Coded Decimal (BCD) calendar mode for easy time and date keeping. The RTCC can be clocked by any of the on-board oscillators with the exception of the AUXHFRCO, and it is capable of providing system wake-up at user defined instances. When receiving frames, the RTCC value can be used for timestamping. The RTCC includes 128 bytes of general purpose data retention, allowing easy and convenient data storage in all energy modes.

3.6.3 Low Energy Timer (LETIMER)

The unique LETIMER is a 16-bit timer that is available in energy mode EM2 Deep Sleep in addition to EM1 Sleep and EM0 Active. This allows it to be used for timing and output generation when most of the device is powered down, allowing simple tasks to be performed while the power consumption of the system is kept at an absolute minimum. The LETIMER can be used to output a variety of waveforms with minimal software intervention. The LETIMER is connected to the Real Time Counter and Calendar (RTCC), and can be configured to start counting on compare matches from the RTCC.

3.6.4 Ultra Low Power Wake-up Timer (CRYOTIMER)

The CRYOTIMER is a 32-bit counter that is capable of running in all energy modes. It can be clocked by either the 32.768 kHz crystal oscillator (LFXO), the 32.768 kHz RC oscillator (LFRCO), or the 1 kHz RC oscillator (ULFRCO). It can provide periodic Wakeup events and PRS signals which can be used to wake up peripherals from any energy mode. The CRYOTIMER provides a wide range of interrupt periods, facilitating flexible ultra-low energy operation.

3.6.5 Pulse Counter (PCNT)

The Pulse Counter (PCNT) peripheral can be used for counting pulses on a single input or to decode quadrature encoded inputs. The clock for PCNT is selectable from either an external source on pin PCTNn_S0IN or from an internal timing reference, selectable from among any of the internal oscillators, except the AUXHFRCO. The module may operate in energy mode EM0 Active, EM1 Sleep, EM2 Deep Sleep, and EM3 Stop.

3.6.6 Watchdog Timer (WDOG)

The watchdog timer can act both as an independent watchdog or as a watchdog synchronous with the CPU clock. It has windowed monitoring capabilities, and can generate a reset or different interrupts depending on the failure mode of the system. The watchdog can also monitor autonomous systems driven by PRS.

3.7 Communications and Other Digital Peripherals

3.7.1 Universal Synchronous/Asynchronous Receiver/Transmitter (USART)

The Universal Synchronous/Asynchronous Receiver/Transmitter is a flexible serial I/O module. It supports full duplex asynchronous UART communication with hardware flow control as well as RS-485, SPI, MicroWire and 3-wire. It can also interface with devices supporting:

- ISO7816 SmartCards
- IrDA
- I^2S

3.7.2 Low Energy Universal Asynchronous Receiver/Transmitter (LEUART)

The unique LEUART™ provides two-way UART communication on a strict power budget. Only a 32.768 kHz clock is needed to allow UART communication up to 9600 baud. The LEUART includes all necessary hardware to make asynchronous serial communication possible with a minimum of software intervention and energy consumption.

3.7.3 Inter-Integrated Circuit Interface (I^2C)

The I^2C module provides an interface between the MCU and a serial I^2C bus. It is capable of acting as both a master and a slave and supports multi-master buses. Standard-mode, fast-mode and fast-mode plus speeds are supported, allowing transmission rates from 10 kbit/s up to 1 Mbit/s. Slave arbitration and timeouts are also available, allowing implementation of an SMBus-compliant system. The interface provided to software by the I^2C module allows precise timing control of the transmission process and highly automated transfers. Automatic recognition of slave addresses is provided in active and low energy modes.

3.7.4 Peripheral Reflex System (PRS)

The Peripheral Reflex System provides a communication network between different peripheral modules without software involvement. Peripheral modules producing Reflex signals are called producers. The PRS routes Reflex signals from producers to consumer peripherals which in turn perform actions in response. Edge triggers and other functionality can be applied by the PRS. The PRS allows peripherals to act autonomously without waking the MCU core, saving power.

3.8 Security Features

3.8.1 GPCRC (General Purpose Cyclic Redundancy Check)

The GPCRC module implements a Cyclic Redundancy Check (CRC) function. It supports both 32-bit and 16-bit polynomials. The supported 32-bit polynomial is 0x04C11DB7 (IEEE 802.3), while the 16-bit polynomial can be programmed to any value, depending on the needs of the application.

3.8.2 Crypto Accelerator (CRYPTO)

The Crypto Accelerator is a fast and energy-efficient autonomous hardware encryption and decryption accelerator. It supports AES encryption and decryption with 128- or 256-bit keys and ECC over both GF(P) and GF(2^m), SHA-1 and SHA-2 (SHA-224 and SHA-256).

Supported modes of operation for AES include: ECB, CTR, CBC, PCBC, CFB, OFB, CBC-MAC, GMAC and CCM.

Supported ECC NIST recommended curves include P-192, P-224, P-256, K-163, K-233, B-163 and B-233.

The CRYPTO is tightly linked to the Radio Buffer Controller (BUFC) enabling fast and efficient autonomous cipher operations on data buffer content. It allows fast processing of GCM (AES), ECC and SHA with little CPU intervention. CRYPTO also provides trigger signals for DMA read and write operations.

3.9 Analog

3.9.1 Analog Port (APORT)

The Analog Port (APORT) is an analog interconnect matrix allowing access to analog modules ADC, ACMP, and IDAC on a flexible selection of pins. Each APORT bus consists of analog switches connected to a common wire. Since many clients can operate differentially, buses are grouped by X/Y pairs.

3.9.2 Analog Comparator (ACMP)

The Analog Comparator is used to compare the voltage of two analog inputs, with a digital output indicating which input voltage is higher. Inputs are selected from among internal references and external pins. The tradeoff between response time and current consumption is configurable by software. Two 6-bit reference dividers allow for a wide range of internally-programmable reference sources. The ACMP can also be used to monitor the supply voltage. An interrupt can be generated when the supply falls below or rises above the programmable threshold.

3.9.3 Analog to Digital Converter (ADC)

The ADC is a Successive Approximation Register (SAR) architecture, with a resolution of up to 12 bits at up to 1 MSamples/s. The output sample resolution is configurable and additional resolution is possible using integrated hardware for averaging over multiple samples. The ADC includes integrated voltage references and an integrated temperature sensor. Inputs are selectable from a wide range of sources, including pins configurable as either single-ended or differential.

3.9.4 Digital to Analog Current Converter (IDAC)

The Digital to Analog Current Converter can source or sink a configurable constant current. This current can be driven on an output pin or routed to the selected ADC input pin for capacitive sensing. The current is programmable between 0.05 µA and 64 µA with several ranges with various step sizes.

3.10 Reset Management Unit (RMU)

The RMU is responsible for handling reset of the ARTIK 030. A wide range of reset sources are available, including several power supply monitors, pin reset, software controlled reset, core lockup reset and watchdog reset.

3.11 Core and Memory

3.11.1 Processor Core

The ARM Cortex-M4F processor includes a 32-bit RISC processor integrating the following features and tasks in the system:

- ARM Cortex-M4F RISC processor achieving 1.25 Dhrystone MIPS/MHz
- Memory Protection Unit (MPU) supporting up to 8 memory segments
- 256 KB flash program memory
- 32 KB RAM data memory
- Configuration and event handling of all modules
- 2-pin Serial-Wire debug interface

3.11.2 Memory System Controller (MSC)

The Memory System Controller (MSC) is the program memory unit of the microcontroller. The flash memory is readable and writable from both the Cortex-M and DMA. The flash memory is divided into two blocks; the main block and the information block. Program code is normally written to the main block, whereas the information block is available for special user data and flash lock bits. There is also a read-only page in the information block containing system and device calibration data. Read and write operations are supported in energy modes EM0 Active and EM1 Sleep.

3.11.3 Linked Direct Memory Access Controller (LDMA)

The Linked Direct Memory Access (LDMA) controller features 8 channels capable of performing memory operations independently of software. This reduces both energy consumption and software workload. The LDMA allows operations to be linked together and staged, enabling sophisticated operations to be implemented.

3.12 Memory Map

The ARTIK 030 memory map is shown in the figures below.

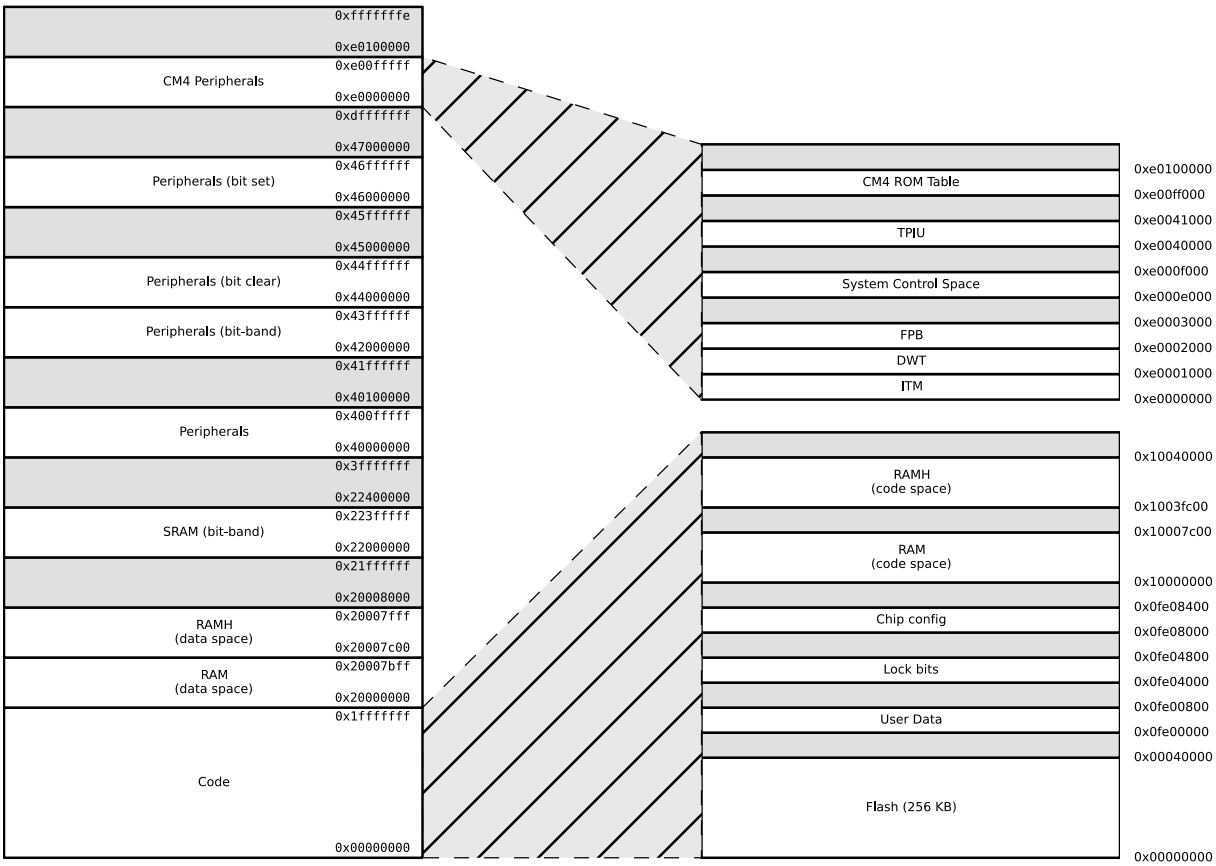

Figure 3.3. ARTIK 030 Memory Map — Core Peripherals and Code Space

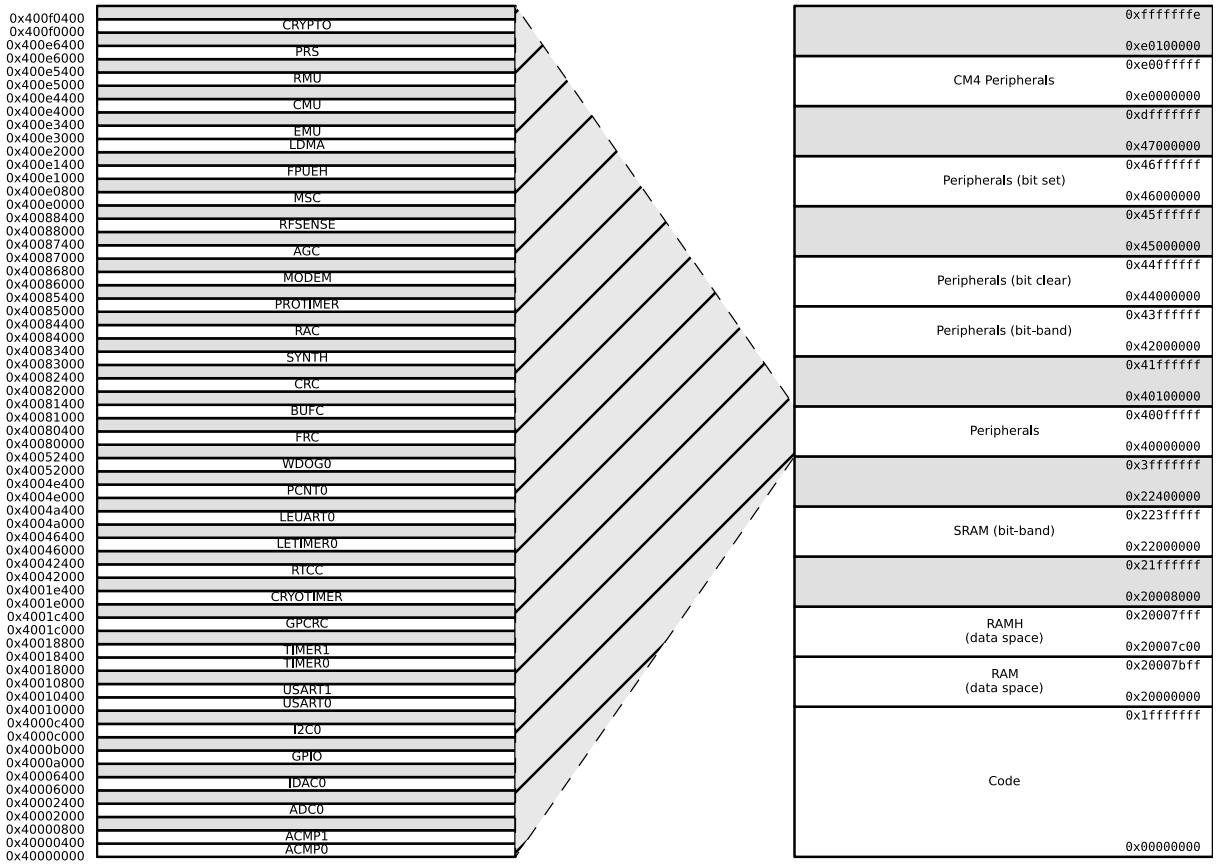

Figure 3.4. ARTIK 030 Memory Map — Peripherals

3.13 Configuration Summary

The features of the ARTIK 030 are a subset of the feature set described in the *EFR32xG1 Wireless Gecko Reference Manual*. The Pin Definitions section describes device specific implementation of the features.

4. Electrical Specifications

4.1 Electrical Characteristics

All electrical parameters in all tables are specified under the following conditions, unless stated otherwise:

- Typical values are based on T_{AMB}=25 °C and V_{DD}= 3.3 V, by production test and/or technology characterization.
- Radio performance numbers are measured in conducted mode, based on Silicon Laboratories reference designs using output power-specific external RF impedance-matching networks for interfacing to a 50 Ω antenna.
- Minimum and maximum values represent the worst conditions across supply voltage, process variation and operating temperature.

Refer to Table 4.2 General Operating Conditions on page 13 for more details about operational supply and temperature limits.

4.1.1 Absolute Maximum Ratings

Stresses above those listed below may cause permanent damage to the device. This is a stress rating only and functional operation of the devices at those or any other conditions above those indicated in the operation listings of this specification is not implied. Exposure to maximum rating conditions for extended periods may affect device reliability.

Table 4.1. Absolute Maximum Ratings

Parameter	Symbol	Test Condition	Min	Typ	Max	Unit
Storage temperature range	T_{STG}		-40	—	+85	°C
External main supply voltage	V_{DDMAX}		0	—	3.8	V
External main supply voltage ramp rate	$V_{DDRAMPMAX}$		—	—	1	V / µs
Voltage on any 5V tolerant GPIO pin[1]	V_{DIGPIN}		-0.3	—	Min of 5.25 and VDD+2	V
Voltage on non-5V tolerant GPIO pins			-0.3	—	VDD+0.3	V
Input RF level	$P_{RFMAX2G4}$		—	—	10	dBm
Current per I/O pin (sink)	I_{IOMAX}		—	—	50	mA
Current per I/O pin (source)			—	—	50	mA
Current for all I/O pins (sink)	$I_{IOALLMAX}$		—	—	200	mA
Current for all I/O pins (source)			—	—	200	mA

Note:

1. When a GPIO pin is routed to the analog module through the APORT, the maximum voltage = VDD.

4.1.2 General Operating Conditions

Table 4.2. General Operating Conditions

Parameter	Symbol	Test Condition	Min	Typ	Max	Unit
Operating temperature range	T_{OP}	Ambient Temperature	-40	25	85	°C
VDD supply voltage[1]	V_{VDD}	DCDC in regulation	2.4	3.3	3.8	V
		DCDC in bypass, 50mA load	1.85	3.3	3.8	V
VDD Current	I_{VDD}	DCDC in bypass	—	—	200	mA
HFCLK frequency	f_{CORE}	0 wait-states (MODE = WS0) [2]	—	—	26	MHz
		1 wait-states (MODE = WS1) [2]	—	38.4	40	MHz

Note:

1. The minimum voltage required in bypass mode is calculated using R_{BYP} from the DCDC specification table. Requirements for other loads can be calculated as $V_{VDD_min}+I_{LOAD} * R_{BYP_max}$
2. in MSC_READCTRL register

4.1.3 DC-DC Converter

Test conditions: V_{DCDC_I}=3.3 V, V_{DCDC_O}=1.8 V, I_{DCDC_LOAD}=50 mA, Heavy Drive configuration, F_{DCDC_LN}=7 MHz, unless otherwise indicated.

Table 4.3. DC-DC Converter

Parameter	Symbol	Test Condition	Min	Typ	Max	Unit
Input voltage range	V_{DCDC_I}	Bypass mode, I_{DCDC_LOAD} = 50 mA	1.85	—	V_{VDD_MAX}	V
		Low noise (LN) mode, 1.8 V output, I_{DCDC_LOAD} = 100 mA, or Low power (LP) mode, 1.8 V output, I_{DCDC_LOAD} = 10 mA	2.4	—	V_{VDD_MAX}	V
		Low noise (LN) mode, 1.8 V output, I_{DCDC_LOAD} = 200 mA	2.6	—	V_{VDD_MAX}	V
Output voltage programmable range [1]	V_{DCDC_O}		1.8	—	$V_{VREGVDD}$	V
Max load current	I_{LOAD_MAX}	Low noise (LN) mode, Heavy Drive [3]	—	—	200	mA
		Low noise (LN) mode, Medium Drive [3]	—	—	100	mA
		Low noise (LN) mode, Light Drive [3]	—	—	50	mA
		Low power (LP) mode, LPCMPBIAS [2] = 0	—	—	75	µA
		Low power (LP) mode, LPCMPBIAS [2] = 3	—	—	10	mA

Note:

1. Due to internal dropout, the DC-DC output will never be able to reach its input voltage, V_{VDD}
2. In EMU_DCDCMISCCTRL register
3. Drive levels are defined by configuration of the PFETCNT and NFETCNT registers. Light Drive: PFETCNT=NFETCNT=3; Medium Drive: PFETCNT=NFETCNT=7; Heavy Drive: PFETCNT=NFETCNT=15.

4.1.4 Current Consumption

4.1.4.1 Current Consumption 3.3 V using DC-DC Converter

Unless otherwise indicated, typical conditions are: VDD = 3.3 V, DC-DC enabled. T_{OP} = 25 °C. Minimum and maximum values in this table represent the worst conditions across supply voltage and process variation at T_{OP} = 25 °C.

Table 4.4. Current Consumption 3.3V with DC-DC

Parameter	Symbol	Test Condition	Min	Typ	Max	Unit
Current consumption in EM0 Active mode with all peripherals disabled, DCDC in Low Noise DCM mode[1].	I_{ACTIVE}	38.4 MHz crystal, CPU running while loop from flash[2]	—	88	—	µA/MHz
		38 MHz HFRCO, CPU running Prime from flash	—	63	—	µA/MHz
		38 MHz HFRCO, CPU running while loop from flash	—	71	—	µA/MHz
		38 MHz HFRCO, CPU running CoreMark from flash	—	78	—	µA/MHz
		26 MHz HFRCO, CPU running while loop from flash	—	76	—	µA/MHz
Current consumption in EM0 Active mode with all peripherals disabled, DCDC in Low Noise CCM mode[3].		38.4 MHz crystal, CPU running while loop from flash[2]	—	98	—	µA/MHz
		38 MHz HFRCO, CPU running Prime from flash	—	75	—	µA/MHz
		38 MHz HFRCO, CPU running while loop from flash	—	81	—	µA/MHz
		38 MHz HFRCO, CPU running CoreMark from flash	—	88	—	µA/MHz
		26 MHz HFRCO, CPU running while loop from flash	—	94	—	µA/MHz
Current consumption in EM1 Sleep mode with all peripherals disabled, DCDC in Low Noise DCM mode[1].	I_{EM1}	38.4 MHz crystal[2]	—	49	—	µA/MHz
		38 MHz HFRCO	—	32	—	µA/MHz
		26 MHz HFRCO	—	38	—	µA/MHz
Current consumption in EM1 Sleep mode with all peripherals disabled, DCDC in Low Noise CCM mode[3].		38.4 MHz crystal[2]	—	61	—	µA/MHz
		38 MHz HFRCO	—	45	—	µA/MHz
		26 MHz HFRCO	—	58	—	µA/MHz
Current consumption in EM2 Deep Sleep mode. DCDC in Low Power mode[4].	I_{EM2}	Full RAM retention and RTCC running from LFXO	—	2.5	—	µA
		4 kB RAM retention and RTCC running from LFRCO	—	2.2	—	µA
Current consumption in EM3 Stop mode	I_{EM3}	Full RAM retention and CRYOTIMER running from ULFRCO	—	2.1	—	µA
Current consumption in EM4H Hibernate mode	I_{EM4}	128 byte RAM retention, RTCC running from LFXO	—	0.86	—	µA
		128 byte RAM retention, CRYOTIMER running from ULFRCO	—	0.58	—	µA
		128 byte RAM retention, no RTCC	—	0.58	—	µA

Parameter	Symbol	Test Condition	Min	Typ	Max	Unit
Current consumption in EM4S Shutoff mode	I_{EM4S}	no RAM retention, no RTCC	—	0.04	—	µA

Note:

1. DCDC Low Noise DCM Mode = Light Drive (PFETCNT=NFETCNT=3), F=3.0 MHz (RCOBAND=0), ANASW=DCDC voltage.
2. CMU_HFXOCTRL_LOWPOWER=0
3. DCDC Low Noise CCM Mode = Light Drive (PFETCNT=NFETCNT=3), F=6.4 MHz (RCOBAND=4), ANASW=DCDC voltage.
4. DCDC Low Power Mode = Medium Drive (PFETCNT=NFETCNT=7), LPOSCDIV=1, LPBIAS=3, LPCILIMSEL=1, ANASW=DCDC voltage.

4.1.4.2 Current Consumption Using Radio

Unless otherwise indicated, typical conditions are: VDD = 3.3 V. T_{OP} = 25 °C. Minimum and maximum values in this table represent the worst conditions across supply voltage and process variation at T_{OP} = 25 °C.

Table 4.5. Current Consumption 3.3 V with DC-DC

Parameter	Symbol	Test Condition	Min	Typ	Max	Unit
Current consumption in receive mode, active packet reception (MCU in EM1 @ 38.4 MHz, peripheral clocks disabled)	I_{RX}	1 Mbit/s, 2GFSK, F = 2.4 GHz, Radio clock prescaled by 4	—	8.7	—	mA
		802.15.4 receiving frame, F = 2.4 GHz, Radio clock prescaled by 3	—	9.8	—	mA
Current consumption in transmit mode (MCU in EM1 @ 38.4 MHz, peripheral clocks disabled)	I_{TX}	F = 2.4 GHz, CW, 0 dBm, Radio clock prescaled by 3	—	8.2	—	mA
		F = 2.4 GHz, CW, 10.5 dBm	—	32.7	—	mA

4.1.5 Wake up times

Table 4.6. Wake up times

Parameter	Symbol	Test Condition	Min	Typ	Max	Unit
Wake up from EM2 Deep Sleep	t_{EM2_WU}	Code execution from flash	—	10.7	—	µs
		Code execution from RAM	—	3	—	µs
Wakeup time from EM1 Sleep	t_{EM1_WU}	Executing from flash	—	3	—	AHB Clocks
		Executing from RAM	—	3	—	AHB Clocks
Wake up from EM3 Stop	t_{EM3_WU}	Executing from flash	—	10.7	—	µs
		Executing from RAM	—	3	—	µs
Wake up from EM4H Hibernate[1]	t_{EM4H_WU}	Executing from flash	—	60	—	µs
Wake up from EM4S Shutoff[1]	t_{EM4S_WU}		—	290	—	µs

Note:

1. Time from wakeup request until first instruction is executed. Wakeup results in device reset.

4.1.6 Brown Out Detector

For the table below, see Figure 3.2 ARTIK 030 Power Block on page 5 to see the internal connection and relation between DVDD and AVDD. The module itself has only one external power supply input (VDD).

Table 4.7. Brown Out Detector

Parameter	Symbol	Test Condition	Min	Typ	Max	Unit
AVDD BOD threshold	$V_{AVDDBOD}$	AVDD rising	—	—	1.85	V
		AVDD falling	1.62	—	—	V
AVDD BOD hysteresis	$V_{AVDDBOD_HYST}$		—	21	—	mV
AVDD response time	$t_{AVDDBOD_DELAY}$	Supply drops at 0.1V/µs rate	—	2.4	—	µs
EM4 BOD threshold	$V_{EM4DBOD}$	AVDD rising	—	—	1.7	V
		AVDD falling	1.45	—	—	V
EM4 BOD hysteresis	V_{EM4BOD_HYST}		—	46	—	mV
EM4 response time	t_{EM4BOD_DELAY}	Supply drops at 0.1V/µs rate	—	300	—	µs

4.1.7 Frequency Synthesizer Characteristics

Table 4.8. Frequency Synthesizer Characteristics

Parameter	Symbol	Test Condition	Min	Typ	Max	Unit
RF Synthesizer Frequency range	F_{RANGE_2400}	2.4 GHz frequency range	2400	—	2483.5	MHz
LO tuning frequency resolution	F_{RES_2400}	2400 - 2483.5 MHz	—	—	73	Hz
Maximum frequency deviation	ΔF_{MAX_2400}		—	—	1677	kHz

4.1.8 2.4 GHz RF Transceiver Characteristics

4.1.8.1 RF Transmitter General Characteristics for the 2.4 GHz Band

Unless otherwise indicated, typical conditions are: T_{OP} = 25 °C, VDD = 3.3 V. RF center frequency 2.45 GHz. Measurements are conducted from the antenna feed point.

Table 4.9. RF Transmitter General Characteristics for 2.4 GHz Band

Parameter	Symbol	Test Condition	Min	Typ	Max	Unit
Maximum TX power	$POUT_{MAX}$		—	10	—	dBm
Minimum active TX Power	$POUT_{MIN}$	CW		-30	—	dBm
Output power step size	$POUT_{STEP}$	-5 dBm < Output power < 0 dBm	—	1	—	dB
		0 dBm < output power < $POUT_{MAX}$	—	0.5	—	dB
Output power variation vs supply at $POUT_{MAX}$	$POUT_{VAR_V}$	1.85 V < V_{VDD} < 3.3 V using DC-DC converter	—	2.2	—	dB
Output power variation vs temperature at $POUT_{MAX}$	$POUT_{VAR_T}$	From -40 to +85 °C, DCDC enabled	—	1.5	—	dB
Output power variation vs RF frequency at $POUT_{MAX}$	$POUT_{VAR_F}$	Over RF tuning frequency range	—	0.4	—	dB
RF tuning frequency range	F_{RANGE}		2400	—	2483.5	MHz

4.1.8.2 RF Receiver General Characteristics for the 2.4 GHz Band

Unless otherwise indicated, typical conditions are: T_{OP} = 25 °C,VDD = 3.3 V. RF center frequency 2.440 GHz. Measurements are conducted from the antenna feed point.

Table 4.10. RF Receiver General Characteristics for 2.4 GHz Band

Parameter	Symbol	Test Condition	Min	Typ	Max	Unit
RF tuning frequency range	F_{RANGE}		2400	—	2483.5	MHz
Receive mode maximum spurious emission	$SPUR_{RX}$	30 MHz to 1 GHz	—	-57	—	dBm
		1 GHz to 12 GHz	—	-47	—	dBm
Max spurious emissions during active receive mode, per FCC Part 15.109(a)	$SPUR_{RX_FCC}$	216 MHz to 960 MHz, Conducted Measurement	—	-55.2	—	dBm
		Above 960 MHz, Conducted Measurement	—	-47.2	—	dBm

4.1.8.3 RF Receiver Characteristics for 802.15.4 O-QPSK DSSS in the 2.4 GHz Band

Unless otherwise indicated, typical conditions are: T=25 °C,VDD = 3.3 V. RF center frequency 2.445 GHz. Meaurements are conducted from the antenna feed point.

Table 4.11. RF Receiver Characteristics for 802.15.4 DSSS-OQPSK in the 2.4 GHz Band

Parameter	Symbol	Test Condition	Min	Typ	Max	Unit
Max usable receiver input level, 1% PER	SAT	Signal is reference signal[1]. Packet length is 20 octets.	—	10	—	dBm
Sensitivity, 1% PER	SENS	Signal is reference signal. Packet length is 20 octets. Using DC-DC converter.	—	-99	—	dBm
		Signal is reference signal. Packet length is 20 octets. DC-DC converter in bypass mode.	—	-99	—	dBm
Co-channel interferer rejection, 1% PER	CCR	Desired signal 10 dB above sensitivity limit	—	-2.6	—	dB
High-side adjacent channel rejection, 1% PER. Desired is reference signal at 3dB above reference sensitivity level[2]	ACR_{+1}	Interferer is reference signal at +1 channel-spacing.	—	33.75	—	dB
		Interferer is filtered reference signal[3] at +1 channel-spacing.	—	52.2	—	dB
		Interferer is CW at +1 channel-spacing.[4]	—	58.6	—	dB
Low-side adjacent channel rejection, 1% PER. Desired is reference signal at 3dB above reference sensitivity level[2]	ACR_{-1}	Interferer is reference signal at -1 channel-spacing.	—	35	—	dB
		Interferer is filtered reference signal[3] at -1 channel-spacing.	—	54.7	—	dB
		Interferer is CW at -1 channel-spacing.	—	60.1	—	dB
Alternate channel rejection, 1% PER. Desired is reference signal at 3dB above reference sensitivity level[2]	ACR_2	Interferer is reference signal at ±2 channel-spacing	—	45.9	—	dB
		Interferer is filtered reference signal[3] at ±2 channel-spacing	—	56.8	—	dB
		Interferer is CW at ±2 channel-spacing	—	65.5	—	dB
Image rejection , 1% PER, Desired is reference signal at 3dB above reference sensitivity level[2]	IR	Interferer is CW in image band[4]	—	49.3	—	dB
Blocking rejection of all other channels. 1% PER, Desired is reference signal at 3dB above reference sensitivity level[2]. Interferer is reference signal.	BLOCK	Interferer frequency < Desired frequency - 3 channel-spacing	—	57.2	—	dB
		Interferer frequency > Desired frequency + 3 channel-spacing	—	57.9	—	dB
Blocking rejection of 802.11g signal centered at +12MHz or -13MHz	$BLOCK_{80211G}$	Desired is reference signal at 6dB above reference sensitivity level[2]	—	51.6	—	dB

Parameter	Symbol	Test Condition	Min	Typ	Max	Unit
Upper limit of input power range over which RSSI resolution is maintained	$RSSI_{MAX}$		5	—	—	dBm
Lower limit of input power range over which RSSI resolution is maintained	$RSSI_{MIN}$		—	—	-98	dBm
RSSI resolution	$RSSI_{RES}$	over $RSSI_{MIN}$ to $RSSI_{MAX}$	—	0.25	—	dB
RSSI accuracy in the linear region as defined by 802.15.4-2003	$RSSI_{LIN}$		—	±1	—	dB

Note:

1. Reference signal is defined as O-QPSK DSSS per 802.15.4, Frequency range = 2400-2483.5 MHz, Symbol rate = 62.5 ksymbols/s
2. Reference sensitivity level is -85 dBm
3. Filter is characterized as a symmetric bandpass centered on the adjacent channel having a 3dB bandwidth of 4.6 MHz and stopband rejection better than 26 dB beyond 3.15 MHz from the adjacent carrier.
4. Due to low-IF frequency, there is some overlap of adjacent channel and image channel bands. Adjacent channel CW blocker tests place the Interferer center frequency at the Desired frequency ±5 MHz on the channel raster, whereas the image rejection test places the CW interferer near the image frequency of the Desired signal carrier, regardless of the channel raster.

4.1.9 Oscillators

4.1.9.1 LFXO

Table 4.12. LFXO

Parameter	Symbol	Test Condition	Min	Typ	Max	Unit
Crystal Frequency	f_{LFXO}		—	32.768	—	kHz
Crystal Frequency Tolerance			-100		+100	ppm

4.1.9.2 HFXO

Table 4.13. HFXO

Parameter	Symbol	Test Condition	Min	Typ	Max	Unit
Crystal Frequency	f_{HFXO}		—	38.4	—	MHz
Crystal Frequency Tolerance			-40		+40	ppm

4.1.9.3 LFRCO

Table 4.14. LFRCO

Parameter	Symbol	Test Condition	Min	Typ	Max	Unit
Oscillation frequency	f_{LFRCO}	ENVREF = 1 in CMU_LFRCOCTRL	30.474	32.768	34.243	kHz
		ENVREF = 0 in CMU_LFRCOCTRL	30.474	32.768	33.915	kHz
Startup time	t_{LFRCO}		—	500	—	µs
Current consumption [1]	I_{LFRCO}	ENVREF = 1 in CMU_LFRCOCTRL	—	342	—	nA
		ENVREF = 0 in CMU_LFRCOCTRL	—	494	—	nA

Note:

1. Block is supplied by VDD if ANASW = 0, or DCDC if ANASW=1 in EMU_PWRCTRL register

4.1.9.4 HFRCO and AUXHFRCO

Table 4.15. HFRCO and AUXHFRCO

Parameter	Symbol	Test Condition	Min	Typ	Max	Unit
Frequency Accuracy	f_{HFRCO}	Any frequency band, across supply voltage and temperature	-2.5	—	2.5	%
Start-up time	t_{HFRCO}	$f_{HFRCO} \geq 19$ MHz	—	300	—	ns
		$4 < f_{HFRCO} < 19$ MHz	—	1	—	µs
		$f_{HFRCO} \leq 4$ MHz	—	2.5	—	µs
Current consumption on all supplies	I_{HFRCO}	$f_{HFRCO} = 38$ MHz	—	204	228	µA
		$f_{HFRCO} = 32$ MHz	—	171	190	µA
		$f_{HFRCO} = 26$ MHz	—	147	164	µA
		$f_{HFRCO} = 19$ MHz	—	126	138	µA
		$f_{HFRCO} = 16$ MHz	—	110	120	µA
		$f_{HFRCO} = 13$ MHz	—	100	110	µA
		$f_{HFRCO} = 7$ MHz	—	81	91	µA
		$f_{HFRCO} = 4$ MHz	—	33	35	µA
		$f_{HFRCO} = 2$ MHz	—	31	35	µA
		$f_{HFRCO} = 1$ MHz	—	30	35	µA
Step size	SS_{HFRCO}	Coarse (% of period)	—	0.8	—	%
		Fine (% of period)	—	0.1	—	%
Period Jitter	PJ_{HFRCO}		—	0.2	—	% RMS

4.1.9.5 ULFRCO

Table 4.16. ULFRCO

Parameter	Symbol	Test Condition	Min	Typ	Max	Unit
Oscillation frequency	f_{ULFRCO}		0.95	1	1.07	kHz

4.1.10 Flash Memory Characteristics

Table 4.17. Flash Memory Characteristics[1]

Parameter	Symbol	Test Condition	Min	Typ	Max	Unit
Flash erase cycles before failure	EC_{FLASH}		10000	—	—	cycles
Flash data retention	RET_{FLASH}		10	—	—	years
Word (32-bit) programming time	t_{W_PROG}		20	26	40	µs
Page erase time	t_{PERASE}		20	27	40	ms
Mass erase time	t_{MERASE}		20	27	40	ms
Device erase time[2]	t_{DERASE}		—	60	74	ms
Page erase current[3]	I_{ERASE}		—	—	3	mA
Mass or Device erase current[3]			—	—	5	mA
Write current[3]	I_{WRITE}		—	—	3	mA

Note:

1. Flash data retention information is published in the Quarterly Quality and Reliability Report.
2. Device erase is issued over the AAP interface and erases all flash, SRAM, the Lock Bit (LB) page, and the User data page Lock Word (ULW)
3. Measured at 25°C

4.1.11 GPIO

Table 4.18. GPIO

Parameter	Symbol	Test Condition	Min	Typ	Max	Unit
Input low voltage	V_{IOIL}		—	—	VDD*0.3	V
Input high voltage	V_{IOIH}		VDD*0.7	—	—	V
Output high voltage relative to VDD	V_{IOOH}	Sourcing 3 mA, VDD ≥ 3 V, DRIVESTRENGTH[1] = WEAK	VDD*0.8	—	—	V
		Sourcing 1.2 mA, VDD ≥ 1.62 V DRIVESTRENGTH[1] = WEAK	VDD*0.6	—	—	V
		Sourcing 20 mA, VDD ≥ 3 V, DRIVESTRENGTH[1] = STRONG	VDD*0.8	—	—	V
		Sourcing 8 mA, VDD ≥ 1.62 V DRIVESTRENGTH[1] = STRONG	VDD*0.6	—	—	V
Output low voltage relative to VDD	V_{IOOL}	Sinking 3 mA, VDD ≥ 3 V, DRIVESTRENGTH[1] = WEAK	—	—	VDD*0.2	V
		Sinking 1.2 mA, VDD ≥ 1.62 V DRIVESTRENGTH[1] = WEAK	—	—	VDD*0.4	V
		Sinking 20 mA, VDD ≥ 3 V, DRIVESTRENGTH[1] = STRONG	—	—	VDD*0.2	V
		Sinking 8 mA, VDD ≥ 1.62 V DRIVESTRENGTH[1] = STRONG	—	—	VDD*0.4	V
Input leakage current	I_{IOLEAK}	All GPIO except LFXO pins, GPIO ≤ VDD	—	0.1	30	nA
		LFXO Pins, GPIO ≤ VDD	—	0.1	50	nA
Input leakage current on 5VTOL pads above VDD	$I_{5VTOLLEAK}$	VDD < GPIO ≤ VDD + 2 V	—	3.3	15	µA
I/O pin pull-up resistor	R_{PU}		30	43	65	kΩ
I/O pin pull-down resistor	R_{PD}		30	43	65	kΩ
Pulse width of pulses removed by the glitch suppression filter	$t_{IOGLITCH}$		20	25	35	ns
Output fall time, From 70% to 30% of V_{IO}	t_{IOOF}	C_L = 50 pF, DRIVESTRENGTH[1] = STRONG, SLEWRATE[1] = 0x6	—	1.8	—	ns
		C_L = 50 pF, DRIVESTRENGTH[1] = WEAK, SLEWRATE[1] = 0x6	—	4.5	—	ns

Parameter	Symbol	Test Condition	Min	Typ	Max	Unit
Output rise time, From 30% to 70% of V_{IO}	t_{IOOR}	C_L = 50 pF, DRIVESTRENGTH[1] = STRONG, SLEWRATE = 0x6[1]	—	2.2	—	ns
		C_L = 50 pF, DRIVESTRENGTH[1] = WEAK, SLEWRATE[1] = 0x6	—	7.4	—	ns

Note:
1. In GPIO_Pn_CTRL register

4.1.12 VMON

Table 4.19. VMON

Parameter	Symbol	Test Condition	Min	Typ	Max	Unit
VMON Supply Current	I_{VMON}	In EM0 or EM1, 1 supply monitored	—	5.8	8.26	µA
		In EM0 or EM1, 4 supplies monitored	—	11.8	16.8	µA
		In EM2, EM3 or EM4, 1 supply monitored	—	62	—	nA
		In EM2, EM3 or EM4, 4 supplies monitored	—	99	—	nA
VMON Loading of Monitored Supply	I_{SENSE}	In EM0 or EM1	—	2	—	µA
		In EM2, EM3 or EM4	—	2	—	nA
Threshold range	V_{VMON_RANGE}		1.62	—	3.4	V
Threshold step size	N_{VMON_STESP}	Coarse	—	200	—	mV
		Fine	—	20	—	mV
Response time	t_{VMON_RES}	Supply drops at 1V/µs rate	—	460	—	ns
Hysteresis	V_{VMON_HYST}		—	26	—	mV

4.1.13 ADC

Table 4.20. ADC

Parameter	Symbol	Test Condition	Min	Typ	Max	Unit
Resolution	$V_{RESOLUTION}$		6	—	12	Bits
Input voltage range	V_{ADCIN}	Single ended	0	—	$2*V_{REF}$	V
		Differential	$-V_{REF}$	—	V_{REF}	V
Input range of external reference voltage, single ended and differential	$V_{ADCREFIN_P}$		1	—	V_{AVDD}	V
Power supply rejection[1]	$PSRR_{ADC}$	At DC	—	80	—	dB
Analog input common mode rejection ratio	$CMRR_{ADC}$	At DC	—	80	—	dB
Current from all supplies, using internal reference buffer. Continous operation. WARMUPMODE[2] = KEEPADCWARM	$I_{ADC_CONTINOUS_LP}$	1 Msps / 16 MHz ADCCLK, BIASPROG = 0, GPBIASACC = 1 [3]	—	301	350	µA
		250 ksps / 4 MHz ADCCLK, BIASPROG = 6, GPBIASACC = 1 [3]	—	149	—	µA
		62.5 ksps / 1 MHz ADCCLK, BIASPROG = 15, GPBIASACC = 1 [3]	—	91	—	µA
Current from all supplies, using internal reference buffer. Duty-cycled operation. WARMUPMODE[2] = NORMAL	$I_{ADC_NORMAL_LP}$	35 ksps / 16 MHz ADCCLK, BIASPROG = 0, GPBIASACC = 1 [3]	—	51	—	µA
		5 ksps / 16 MHz ADCCLK BIASPROG = 0, GPBIASACC = 1 [3]	—	9	—	µA
Current from all supplies, using internal reference buffer. Duty-cycled operation. AWARMUPMODE[2] = KEEPINSTANDBY or KEEPINSLOWACC	$I_{ADC_STANDBY_LP}$	125 ksps / 16 MHz ADCCLK, BIASPROG = 0, GPBIASACC = 1 [3]	—	117	—	µA
		35 ksps / 16 MHz ADCCLK, BIASPROG = 0, GPBIASACC = 1 [3]	—	79	—	µA
Current from all supplies, using internal reference buffer. Continous operation. WARMUPMODE[2] = KEEPADCWARM	$I_{ADC_CONTINOUS_HP}$	1 Msps / 16 MHz ADCCLK, BIASPROG = 0, GPBIASACC = 0 [3]	—	345	—	µA
		250 ksps / 4 MHz ADCCLK, BIASPROG = 6, GPBIASACC = 0 [3]	—	191	—	µA
		62.5 ksps / 1 MHz ADCCLK, BIASPROG = 15, GPBIASACC = 0 [3]	—	132	—	µA

Parameter	Symbol	Test Condition	Min	Typ	Max	Unit
Current from all supplies, using internal reference buffer. Duty-cycled operation. WARMUPMODE[2] = NORMAL	$I_{ADC_NORMAL_HP}$	35 ksps / 16 MHz ADCCLK, BIASPROG = 0, GPBIASACC = 0 [3]	—	102	—	µA
		5 ksps / 16 MHz ADCCLK BIASPROG = 0, GPBIASACC = 0 [3]	—	17	—	µA
Current from all supplies, using internal reference buffer. Duty-cycled operation. AWARMUPMODE[2] = KEEPINSTANDBY or KEEPINSLOWACC	$I_{ADC_STANDBY_HP}$	125 ksps / 16 MHz ADCCLK, BIASPROG = 0, GPBIASACC = 0 [3]	—	162	—	µA
		35 ksps / 16 MHz ADCCLK, BIASPROG = 0, GPBIASACC = 0 [3]	—	123	—	µA
Current from HFPERCLK	I_{ADC_CLK}	HFPERCLK = 16 MHz	—	140	—	µA
ADC Clock Frequency	f_{ADCCLK}		—	—	16	MHz
Throughput rate	$f_{ADCRATE}$		—	—	1	Msps
Conversion time[4]	$t_{ADCCONV}$	6 bit	—	7	—	cycles
		8 bit	—	9	—	cycles
		12 bit	—	13	—	cycles
Startup time of reference generator and ADC core	$t_{ADCSTART}$	WARMUPMODE[2] = NORMAL	—	—	5	µs
		WARMUPMODE[2] = KEEPINSTANDBY	—	—	2	µs
		WARMUPMODE[2] = KEEPINSLOWACC	—	—	1	µs
SNDR at 1Msps and f_{in} = 10kHz	$SNDR_{ADC}$	Internal reference, 2.5 V full-scale, differential (-1.25, 1.25)	58	67	—	dB
		vrefp_in = 1.25 V direct mode with 2.5 V full-scale, differential	—	68	—	dB
Spurious-Free Dynamic Range (SFDR)	$SFDR_{ADC}$	1 MSamples/s, 10 kHz full-scale sine wave	—	75	—	dB
Input referred ADC noise, rms	V_{REF_NOISE}	Including quantization noise and distortion	—	380	—	µV
Offset Error	$V_{ADCOFFSETERR}$		-3	0.25	3	LSB
Gain error in ADC	V_{ADC_GAIN}	Using internal reference	—	-0.2	5	%
		Using external reference	—	-1	—	%
Differential non-linearity (DNL)	DNL_{ADC}	12 bit resolution	-1	—	2	LSB
Integral non-linearity (INL), End point method	INL_{ADC}	12 bit resolution	-6	—	6	LSB
Temperature Sensor Slope	V_{TS_SLOPE}		—	-1.84	—	mV/°C

Parameter	Symbol	Test Condition	Min	Typ	Max	Unit

Note:

1. PSRR is referenced to AVDD when ANASW=0 and to DVDD when ANASW=1 in EMU_PWRCTRL
2. In ADCn_CNTL register
3. In ADCn_BIASPROG register
4. Derived from ADCCLK

4.1.14 IDAC

Table 4.21. IDAC

Parameter	Symbol	Test Condition	Min	Typ	Max	Unit
Number of Ranges	N_{IDAC_RANGES}		—	4	—	-
Output Current	I_{IDAC_OUT}	RANGSEL[1] = RANGE0	0.05	—	1.6	µA
		RANGSEL[1] = RANGE1	1.6	—	4.7	µA
		RANGSEL[1] = RANGE2	0.5	—	16	µA
		RANGSEL[1] = RANGE3	2	—	64	µA
Linear steps within each range	N_{IDAC_STEPS}		—	32	—	
Step size	SS_{IDAC}	RANGSEL[1] = RANGE0	—	50	—	nA
		RANGSEL[1] = RANGE1	—	100	—	nA
		RANGSEL[1] = RANGE2	—	500	—	nA
		RANGSEL[1] = RANGE3	—	2	—	µA
Total Accuracy, STEPSEL[1] = 0x10	ACC_{IDAC}	EM0 or EM1, AVDD=3.3 V, T = 25 °C	-2	—	2	%
		EM0 or EM1	-18	—	22	%
		EM2 or EM3, Source mode, RANGSEL[1] = RANGE0, AVDD=3.3 V, T = 25 °C	—	-2	—	%
		EM2 or EM3, Source mode, RANGSEL[1] = RANGE1, AVDD=3.3 V, T = 25 °C	—	-1.7	—	%
		EM2 or EM3, Source mode, RANGSEL[1] = RANGE2, AVDD=3.3 V, T = 25 °C	—	-0.8	—	%
		EM2 or EM3, Source mode, RANGSEL[1] = RANGE3, AVDD=3.3 V, T = 25 °C	—	-0.5	—	%
		EM2 or EM3, Sink mode, RANGSEL[1] = RANGE0, AVDD=3.3 V, T = 25 °C	—	-0.7	—	%
		EM2 or EM3, Sink mode, RANGSEL[1] = RANGE1, AVDD=3.3 V, T = 25 °C	—	-0.6	—	%
		EM2 or EM3, Sink mode, RANGSEL[1] = RANGE2, AVDD=3.3 V, T = 25 °C	—	-0.5	—	%
		EM2 or EM3, Sink mode, RANGSEL[1] = RANGE3, AVDD=3.3 V, T = 25 °C	—	-0.5	—	%
Start up time	t_{IDAC_SU}	Output within 1% of steady state value	—	5	—	µs

Parameter	Symbol	Test Condition	Min	Typ	Max	Unit
Settling time, (output settled within 1% of steady state value)	t_{IDAC_SETTLE}	Range setting is changed	—	5	—	µs
		Step value is changed	—	1	—	µs
Current consumption in EM0 or EM1 [2]	I_{IDAC}	Source mode, excluding output current	—	8.9	13	µA
		Sink mode, excluding output current	—	12	16	µA
Current consumption in EM2 or EM3[2]		Source mode, excluding output current, duty cycle mode, T = 25 °C	—	1.04	—	µA
		Sink mode, excluding output current, duty cycle mode, T = 25 °C	—	1.08	—	µA
		Source mode, excluding output current, duty cycle mode, T ≥ 85 °C	—	8.9	—	µA
		Sink mode, excluding output current, duty cycle mode, T ≥ 85 °C	—	12	—	µA
Output voltage compliance in source mode, source current change relative to current sourced at 0 V	I_{COMP_SRC}	RANGESEL1=0, output voltage = min(V_{IOVDD}, V_{AVDD}[2]-100 mv)	—	0.04	—	%
		RANGESEL1=1, output voltage = min(V_{IOVDD}, V_{AVDD}[2]-100 mV)	—	0.02	—	%
		RANGESEL1=2, output voltage = min(V_{IOVDD}, V_{AVDD}[2]-150 mV)	—	0.02	—	%
		RANGESEL1=3, output voltage = min(V_{IOVDD}, V_{AVDD}[2]-250 mV)	—	0.02	—	%
Output voltage compliance in sink mode, sink current change relative to current sunk at IOVDD	I_{COMP_SINK}	RANGESEL1=0, output voltage = 100 mV	—	0.18	—	%
		RANGESEL1=1, output voltage = 100 mV	—	0.12	—	%
		RANGESEL1=2, output voltage = 150 mV	—	0.08	—	%
		RANGESEL1=3, output voltage = 250 mV	—	0.02	—	%

Note:

1. In IDAC_CURPROG register
2. The IDAC is supplied by either AVDD, DVDD, or IOVDD based on the setting of ANASW in the EMU_PWRCTRL register and PWRSEL in the IDAC_CTRL register. Setting PWRSEL to 1 selects IOVDD. With PWRSEL cleared to 0, ANASW selects between AVDD (0) and DVDD (1).

4.1.15 Analog Comparator (ACMP)

Table 4.22. ACMP

Parameter	Symbol	Test Condition	Min	Typ	Max	Unit
Input voltage range	V_{ACMPIN}	CMPVDD = ACMPn_CTRL_PWRSEL [1]	0	—	CMPVDD	V
Supply Voltage	$V_{ACMPVDD}$	BIASPROG[2] ≤ 0x10 or FULL-BIAS[2] = 0	1.85	—	V_{VDD_MAX}	V
		0x10 < BIASPROG[2] ≤ 0x20 and FULLBIAS[2] = 1	2.1	—	V_{VDD_MAX}	V
Active current not including voltage reference	I_{ACMP}	BIASPROG[2] = 1, FULLBIAS[2] = 0	—	50	—	nA
		BIASPROG[2] = 0x10, FULLBIAS[2] = 0	—	306	—	nA
		BIASPROG[2] = 0x20, FULLBIAS[2] = 1	—	74	95	µA
Current consumption of internal voltage reference	$I_{ACMPREF}$	VLP selected as input using 2.5 V Reference / 4 (0.625 V)	—	50	—	nA
		VLP selected as input using VDD	—	20	—	nA
		VBDIV selected as input using 1.25 V reference / 1	—	4.1	—	µA
		VADIV selected as input using VDD/1	—	2.4	—	µA
Hysteresis (V_{CM} = 1.25 V, BIASPROG[2] = 0x10, FULL-BIAS[2] = 1)	$V_{ACMPHYST}$	HYSTSEL[3] = HYST0	-1.75	0	1.75	mV
		HYSTSEL[3] = HYST1	10	18	26	mV
		HYSTSEL[3] = HYST2	21	32	46	mV
		HYSTSEL[3] = HYST3	27	44	63	mV
		HYSTSEL[3] = HYST4	32	55	80	mV
		HYSTSEL[3] = HYST5	38	65	100	mV
		HYSTSEL[3] = HYST6	43	77	121	mV
		HYSTSEL[3] = HYST7	47	86	148	mV
		HYSTSEL[3] = HYST8	-4	0	4	mV
		HYSTSEL[3] = HYST9	-27	-18	-10	mV
		HYSTSEL[3] = HYST10	-47	-32	-18	mV
		HYSTSEL[3] = HYST11	-64	-43	-27	mV
		HYSTSEL[3] = HYST12	-78	-54	-32	mV
		HYSTSEL[3] = HYST13	-93	-64	-37	mV
		HYSTSEL[3] = HYST14	-113	-74	-42	mV
		HYSTSEL[3] = HYST15	-135	-85	-47	mV

Parameter	Symbol	Test Condition	Min	Typ	Max	Unit
Comparator delay[4]	$t_{ACMPDELAY}$	BIASPROG[2] = 1, FULLBIAS[2] = 0	—	30	—	µs
		BIASPROG[2] = 0x10, FULLBIAS[2] = 0	—	3.7	—	µs
		BIASPROG[2] = 0x20, FULLBIAS[2] = 1	—	35	—	ns
Offset voltage	$V_{ACMPOFFSET}$	BIASPROG[2] =0x10, FULLBIAS[2] = 1	-35	—	35	mV
Reference Voltage	$V_{ACMPREF}$	Internal 1.25 V reference	1	1.25	1.47	V
		Internal 2.5 V reference	2	2.5	2.8	V
Capacitive Sense Internal Resistance	R_{CSRES}	CSRESSEL[5] = 0	—	inf	—	kΩ
		CSRESSEL[5] = 1	—	15	—	kΩ
		CSRESSEL[5] = 2	—	27	—	kΩ
		CSRESSEL[5] = 3	—	39	—	kΩ
		CSRESSEL[5] = 4	—	51	—	kΩ
		CSRESSEL[5] = 5	—	102	—	kΩ
		CSRESSEL[5] = 6	—	164	—	kΩ
		CSRESSEL[5] = 7	—	239	—	kΩ

Note:

1. CMPVDD is a supply chosen by the setting in ACMPn_CTRL_PWRSEL and may be VDD or DCDC.
2. In ACMPn_CTRL register.
3. In ACMPn_HYSTERESIS register.
4. ±100 mV differential drive.
5. In ACMPn_INPUTSEL register.

The total ACMP current is the sum of the contributions from the ACMP and its internal voltage reference as given as:

$$I_{ACMPTOTAL} = I_{ACMP} + I_{ACMPREF}$$

$I_{ACMPREF}$ is zero if an external voltage reference is used.

4.1.16 I2C

I2C Standard-mode (Sm)

Table 4.23. I2C Standard-mode (Sm)[1]

Parameter	Symbol	Test Condition	Min	Typ	Max	Unit
SCL clock frequency[2]	f_{SCL}		0	—	100	kHz
SCL clock low time	t_{LOW}		4.7	—	—	µs
SCL clock high time	t_{HIGH}		4	—	—	µs
SDA set-up time	$t_{SU,DAT}$		250	—	—	ns
SDA hold time[3]	$t_{HD,DAT}$		100	—	3450	ns
Repeated START condition set-up time	$t_{SU,STA}$		4.7	—	—	µs
(Repeated) START condition hold time	$t_{HD,STA}$		4	—	—	µs
STOP condition set-up time	$t_{SU,STO}$		4	—	—	µs
Bus free time between a STOP and START condition	t_{BUF}		4.7	—	—	µs

Note:

1. For CLHR set to 0 in the I2Cn_CTRL register
2. For the minimum HFPERCLK frequency required in Standard-mode, refer to the I2C chapter in the reference manual
3. The maximum SDA hold time ($t_{HD,DAT}$) needs to be met only when the device does not stretch the low time of SCL (t_{LOW})

I2C Fast-mode (Fm)

Table 4.24. I2C Fast-mode (Fm)[1]

Parameter	Symbol	Test Condition	Min	Typ	Max	Unit
SCL clock frequency[2]	f_{SCL}		0	—	400	kHz
SCL clock low time	t_{LOW}		1.3	—	—	µs
SCL clock high time	t_{HIGH}		0.6	—	—	µs
SDA set-up time	$t_{SU,DAT}$		100	—	—	ns
SDA hold time[3]	$t_{HD,DAT}$		100	—	900	ns
Repeated START condition set-up time	$t_{SU,STA}$		0.6	—	—	µs
(Repeated) START condition hold time	$t_{HD,STA}$		0.6	—	—	µs
STOP condition set-up time	$t_{SU,STO}$		0.6	—	—	µs
Bus free time between a STOP and START condition	t_{BUF}		1.3	—	—	µs

Note:
1. For CLHR set to 1 in the I2Cn_CTRL register
2. For the minimum HFPERCLK frequency required in Fast-mode, refer to the I2C chapter in the reference manual
3. The maximum SDA hold time ($t_{HD,DAT}$) needs to be met only when the device does not stretch the low time of SCL (t_{LOW})

I2C Fast-mode Plus (Fm+)

Table 4.25. I2C Fast-mode Plus (Fm+)[1]

Parameter	Symbol	Test Condition	Min	Typ	Max	Unit
SCL clock frequency[2]	f_{SCL}		0	—	1000	kHz
SCL clock low time	t_{LOW}		0.5	—	—	µs
SCL clock high time	t_{HIGH}		0.26	—	—	µs
SDA set-up time	$t_{SU,DAT}$		50	—	—	ns
SDA hold time	$t_{HD,DAT}$		100	—	—	ns
Repeated START condition set-up time	$t_{SU,STA}$		0.26	—	—	µs
(Repeated) START condition hold time	$t_{HD,STA}$		0.26	—	—	µs
STOP condition set-up time	$t_{SU,STO}$		0.26	—	—	µs
Bus free time between a STOP and START condition	t_{BUF}		0.5	—	—	µs

Note:
1. For CLHR set to 0 or 1 in the I2Cn_CTRL register
2. For the minimum HFPERCLK frequency required in Fast-mode Plus, refer to the I2C chapter in the reference manual

4.1.17 USART SPI

SPI Master Timing

Table 4.26. SPI Master Timing

Parameter	Symbol	Test Condition	Min	Typ	Max	Unit
SCLK period [1] [2]	t_{SCLK}		2 * $t_{HFPERCLK}$	—	—	ns
CS to MOSI [1] [2]	t_{CS_MO}		0	—	8	ns
SCLK to MOSI [1] [2]	t_{SCLK_MO}		3	—	20	ns
MISO setup time [1] [2]	t_{SU_MI}	VDD = 3.0 V	37	—	—	ns
MISO hold time [1] [2]	t_{H_MI}		6	—	—	ns

Note:
1. Applies for both CLKPHA = 0 and CLKPHA = 1 (figure only shows CLKPHA = 0)
2. Measurement done with 8 pF output loading at 10% and 90% of V_{DD} (figure shows 50% of V_{DD})

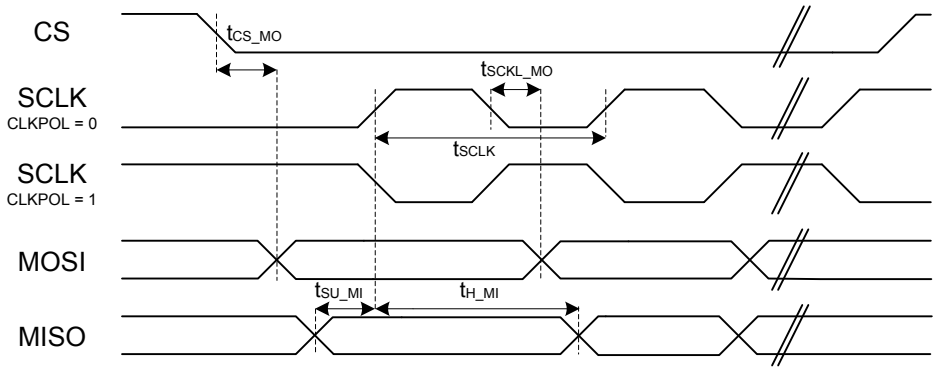

Figure 4.1. SPI Master Timing Diagram

SPI Slave Timing

Table 4.27. SPI Slave Timing

Parameter	Symbol	Test Condition	Min	Typ	Max	Unit
SCKL period [1 2]	t_{SCLK_sl}		2 * $t_{HFPERCLK}$	—	—	ns
SCLK high period[1 2]	t_{SCLK_hi}		3 * $t_{HFPERCLK}$	—	—	ns
SCLK low period [1 2]	t_{SCLK_lo}		3 * $t_{HFPERCLK}$	—	—	ns
CS active to MISO [1 2]	$t_{CS_ACT_MI}$		4	—	50	ns
CS disable to MISO [1 2]	$t_{CS_DIS_MI}$		4	—	50	ns
MOSI setup time [1 2]	t_{SU_MO}		4	—	—	ns
MOSI hold time [1 2]	t_{H_MO}		3 + 2 * $t_{HFPERCLK}$	—	—	ns
SCLK to MISO [1 2]	t_{SCLK_MI}		16 + $t_{HFPERCLK}$	—	66 + 2 * $t_{HFPERCLK}$	ns

Note:
1. Applies for both CLKPHA = 0 and CLKPHA = 1 (figure only shows CLKPHA = 0)
2. Measurement done with 8 pF output loading at 10% and 90% of V_{DD} (figure shows 50% of V_{DD})

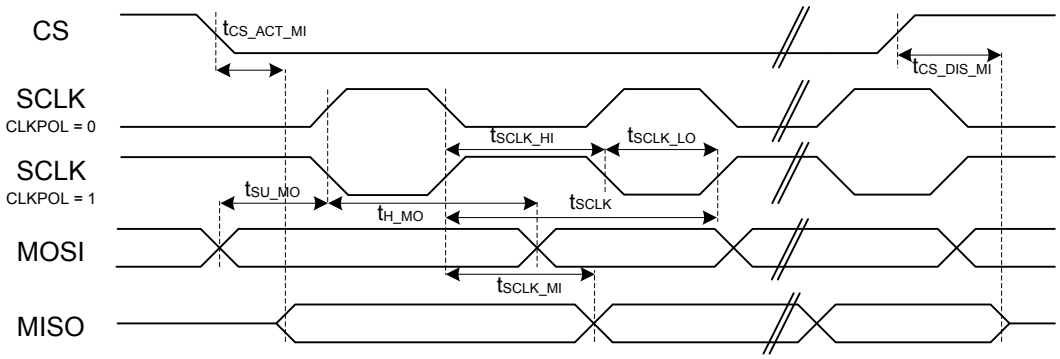

Figure 4.2. SPI Slave Timing Diagram

5. Typical Connection Diagrams

5.1 Network Co-Processor (NCP) Application with UART Host

The ARTIK 030 can be controlled over the UART interface as a peripheral to an external host processor. Typical power supply, programming/debug, and host interface connections are shown in the figure below. Refer to *AN958: Debugging and Programming Interfaces for Custom Designs* for more details.

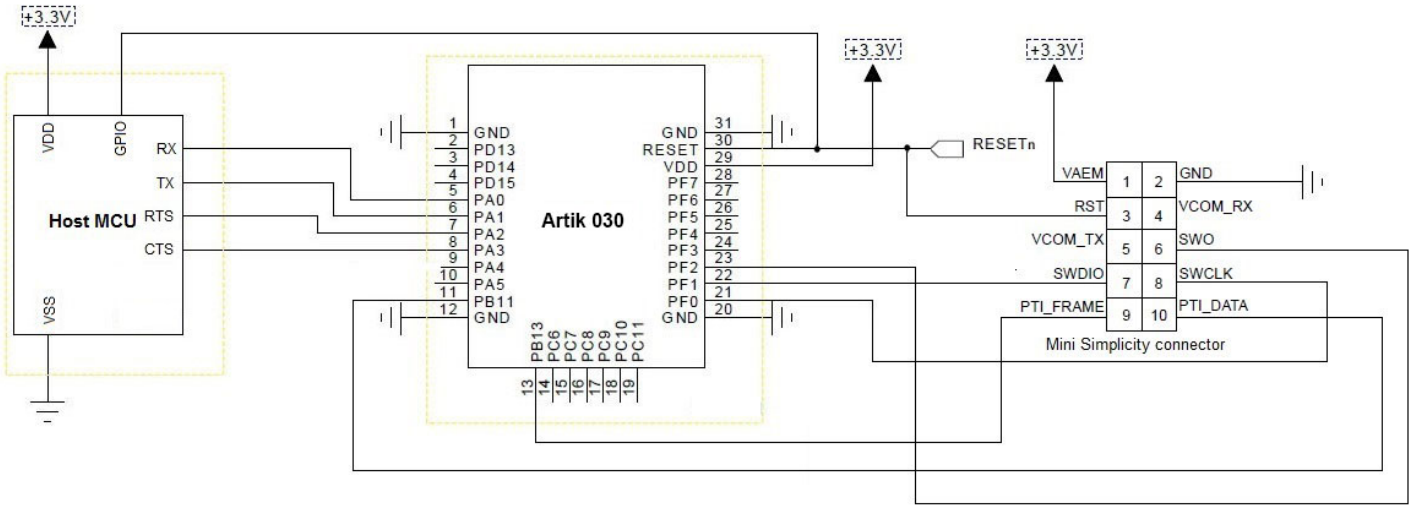

Figure 5.1. Connection Diagram: UART NCP Configuration

5.2 Network Co-Processor (NCP) Application with SPI Host

The ARTIK 030 can be controlled over the SPI interface as a peripheral to an external host processor. Typical power supply, programming/debug and host interface connections are shown in the figure below. Refer to *AN958: Debugging and Programming Interfaces for Custom Designs* for more details.

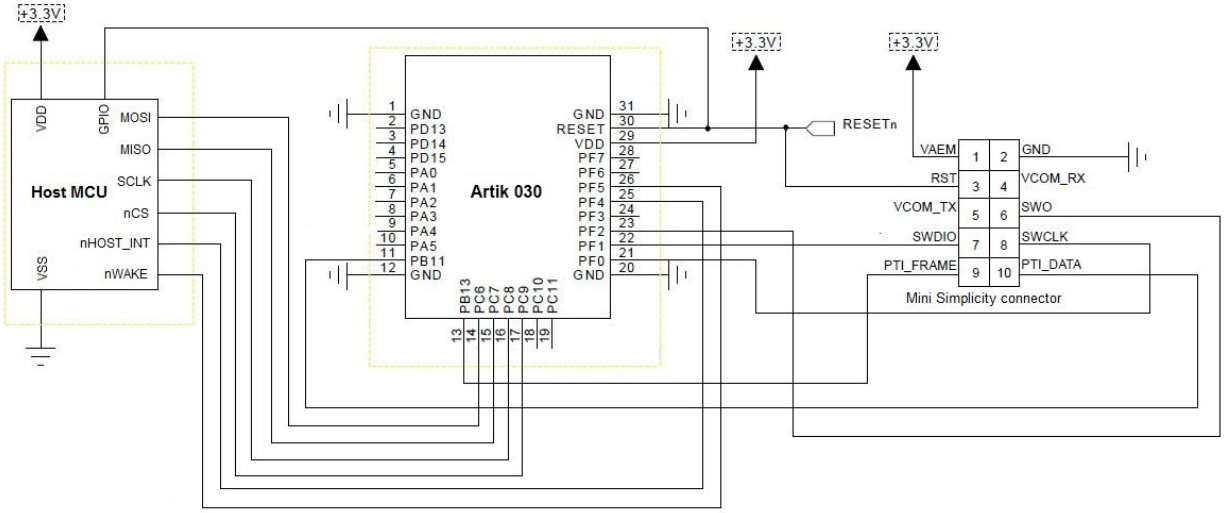

Figure 5.2. Connection Diagram: SPI NCP Configuration

5.3 SoC Application

The ARTIK 030 can be used in a standalone SoC configuration with no external host processor. Typical power supply and programming/debug connections are shown in the figure below. Refer to *AN958: Debugging and Programming Interfaces for Custom Designs* for more details. Refer to *AN772: Using the Application Bootloader* for recommendations on supported serial flash ICs (optional).

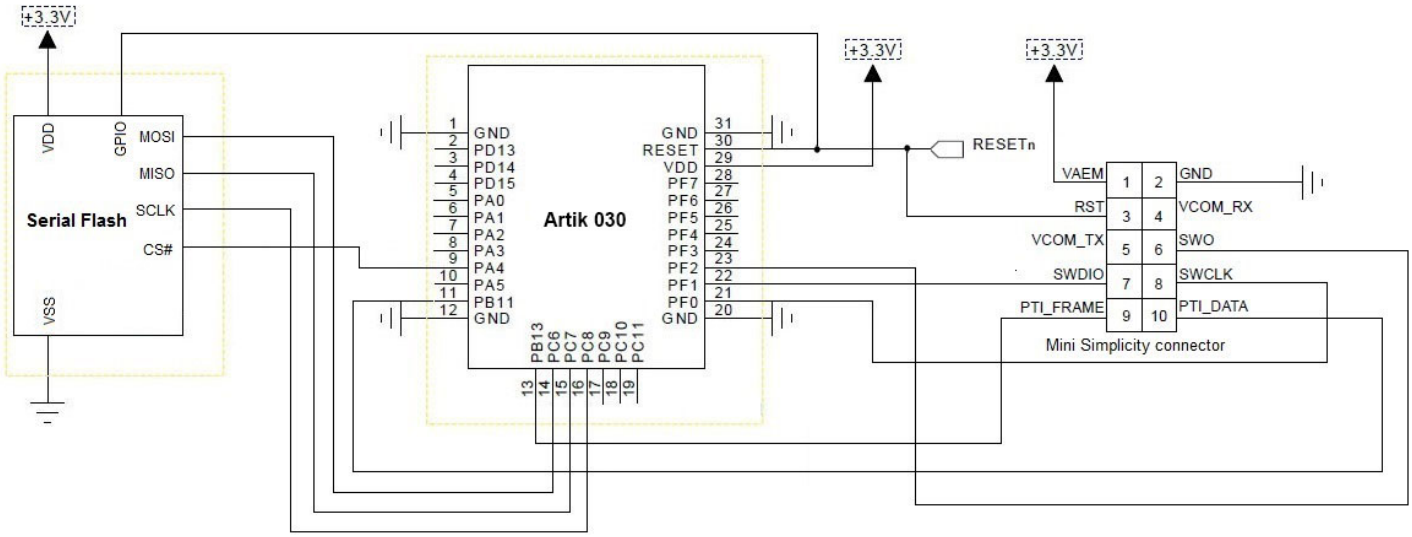

Figure 5.3. Connection Diagram: SoC Configuration

6. Layout Guidelines

For optimal performance of the ARTIK 030A (with intergrated antenna), please follow the PCB layout guidelines and ground plane recommendations indicated in this section.

6.1 Module Placement and Application PCB Layout Guidelines

- Place the module at the edge of the PCB, as shown in the figure below.
- Do not place any metal (traces, components, battery, etc.) within the clearance area of the antenna (shown in the figure below).
- Connect all ground pads directly to a solid ground plane.
- Place the ground vias as close to the ground pads as possible.
- Do not place plastic or any other dielectric material in touch with the antenna.

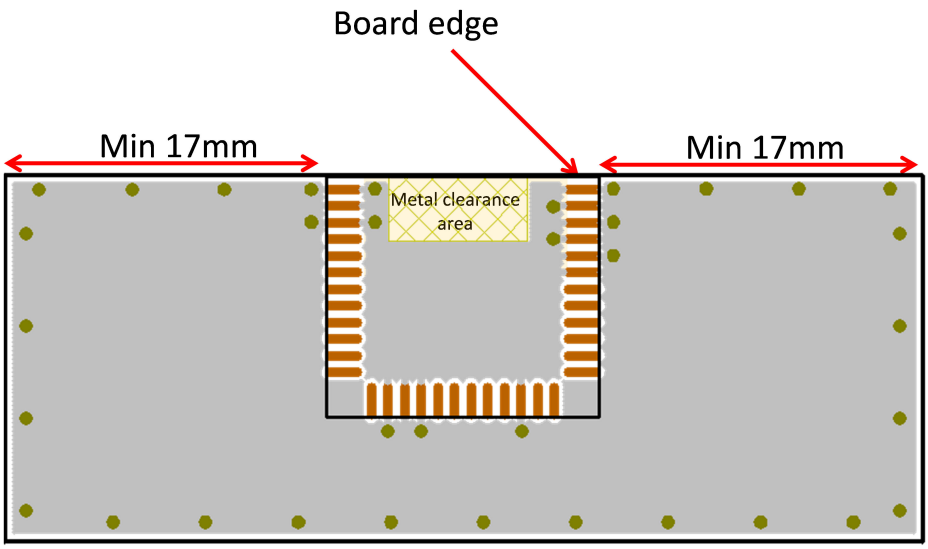

Figure 6.1. Recommended Application PCB Layout for ARTIK 030A

The layouts in the next figure will result in severely degraded RF-performance.

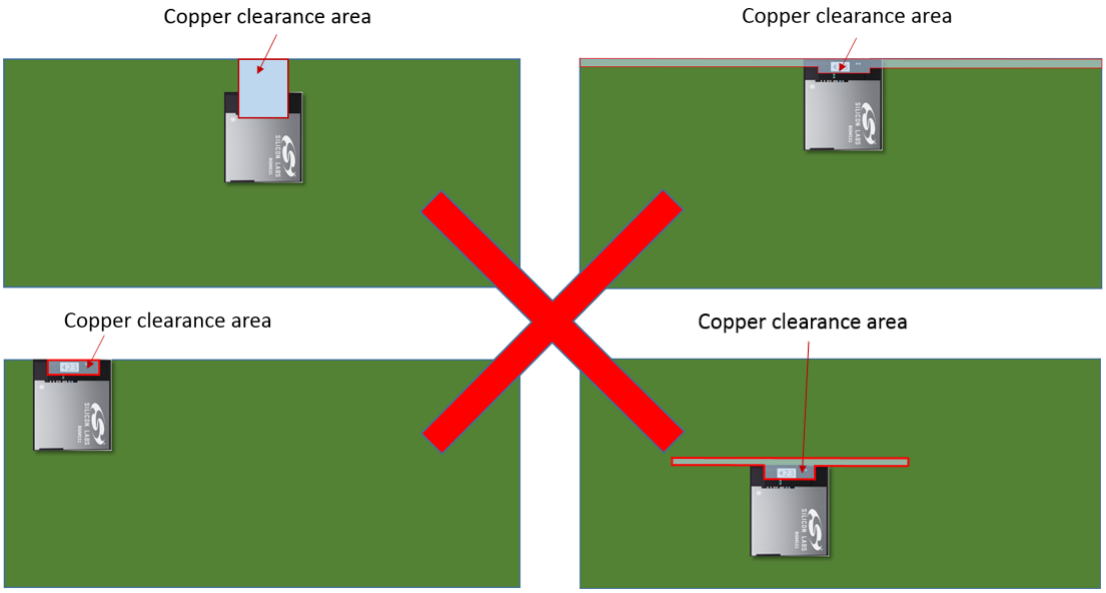

Figure 6.2. Non-optimal Module Placements for ARTIK 030A

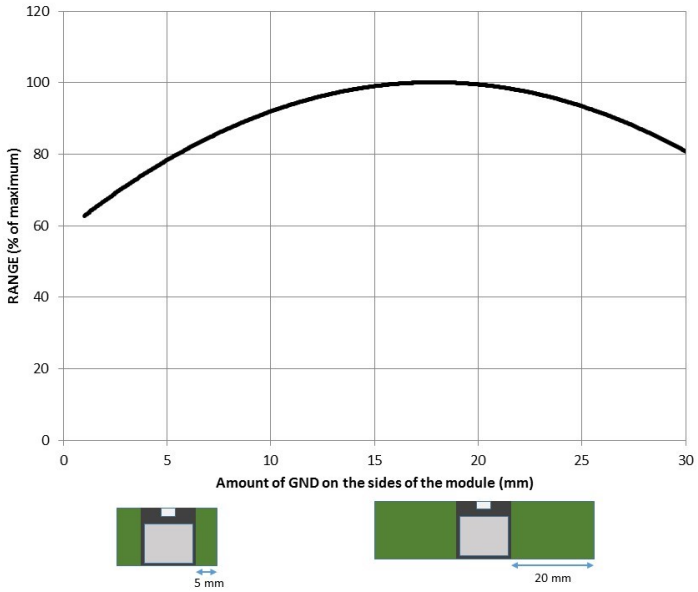

Figure 6.3. Impact of GND Plane Size vs. Range for ARTIK 030A

6.2 Effect of Plastic and Metal Materials

Do not place plastic or any other dielectric material in closs proximity to the antenna.

Any metallic objects in close proximity to the antenna will prevent the antenna from radiating freely. The minimum recommended distance of metallic and/or conductive objects is 10 mm in any direction from the antenna except in the directions of the application PCB ground planes.

6.3 Locating the Module Close to Human Body

Placing the module in touch or very close to the human body will negatively impact antenna efficiency and reduce range.

6.4 2D Radiation Pattern Plots

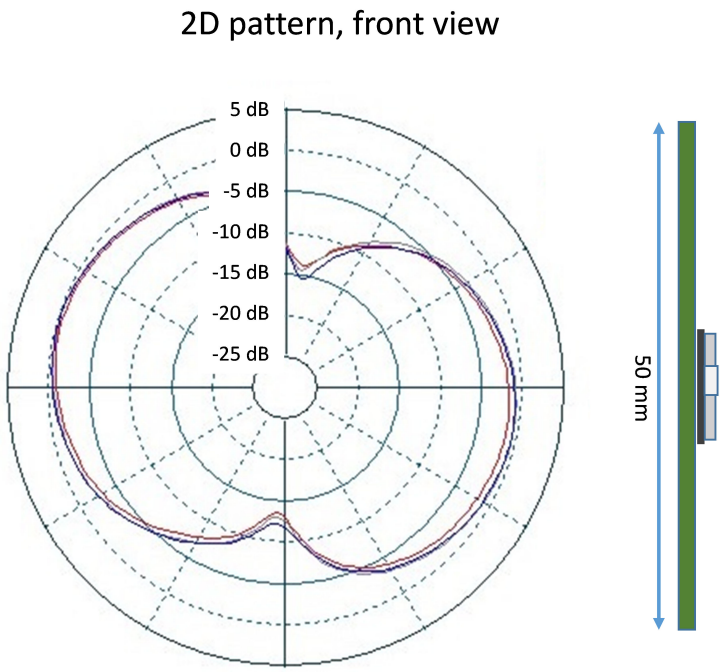

Figure 6.4. Typical 2D Radiation Pattern – Front View

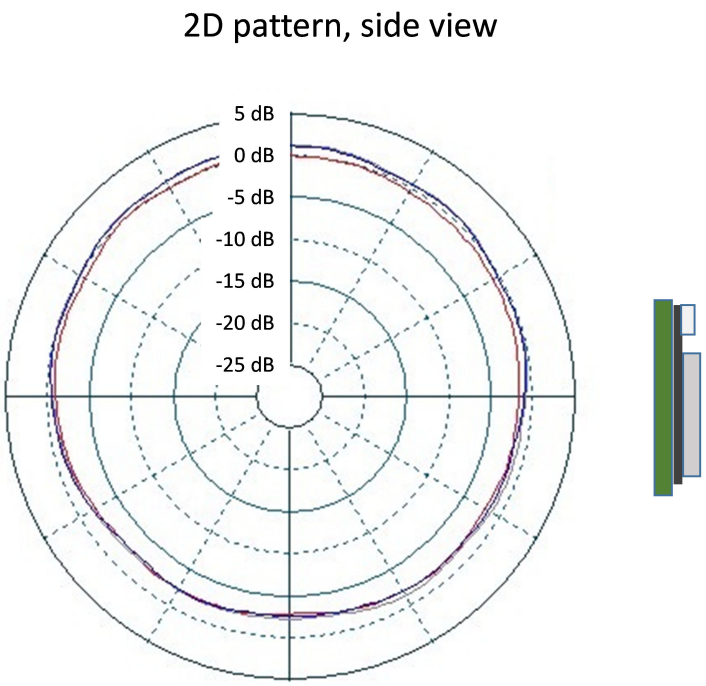

Figure 6.5. Typical 2D Radiation Pattern – Side View

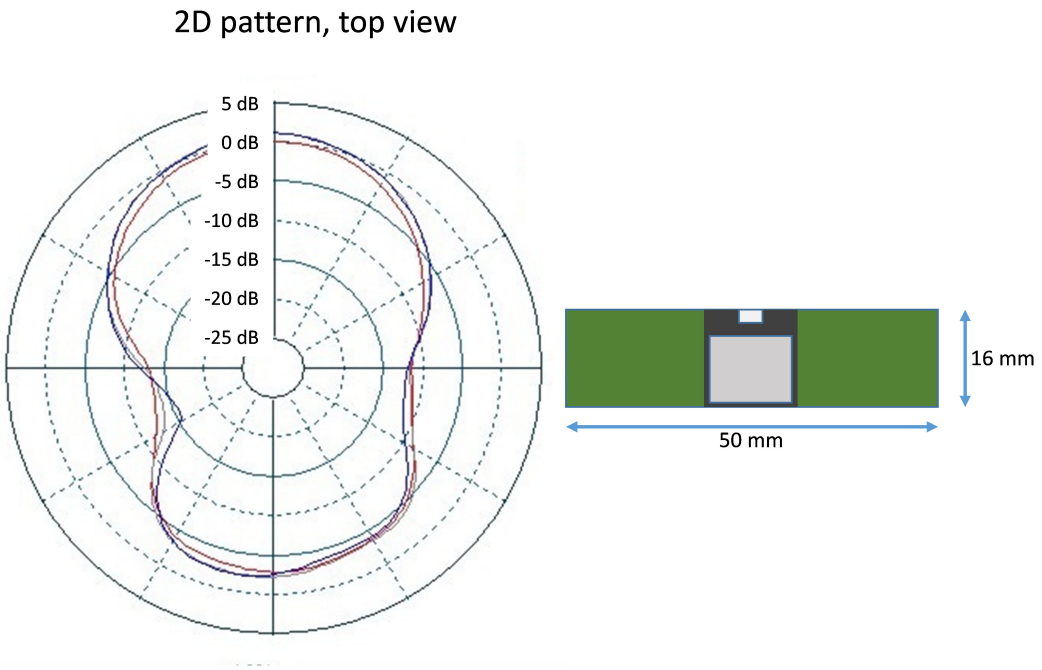

Figure 6.6. Typical 2D Radiation Pattern – Top View

7. Hardware Design Guidelines

The ARTIK 030 is an easy-to-use module with regard to hardware application design but certain design guidelines must be followed to guarantee optimal performance. These guidelines are listed in the next sub-sections.

7.1 Power Supply Requirements

Coin cell batteries cannot withstand high peak currents (e.g. higher than 15 mA). If the peak current exceeds 15 mA it's recommended to place 47 - 100 µF capacitor in parallel with the coin cell battery to improve the battery life time. Notice that the total current consumption of your application is a combination of the radio, peripherals and MCU current consumption so you must take all of these into account. ARTIK 030 should be powered by a unipolar supply voltage with nominal value of 3.3 V.

7.2 Reset Functions

The ARTIK 030 can be reset by three different methods: by pulling the RESET line low, by the internal watchdog timer or software command. The reset state in ARTIK 030 does not provide any power saving functionality and thus is not recommended as a means to conserve power. ARTIK 030 has an internal system power-up reset function. The RESET pin includes an on-chip pull-up resistor and can therefore be left unconnected if no external reset switch or source is needed.

7.3 Debug and Firmware Updates

This section contains information on debug and firmware update methods. For additional information, refer to the following application note: *AN958: Debugging and Programming Interfaces for Custom Designs*.

7.3.1 JTAG

It is recommended to expose the JTAG debug pins in your own hardware design for firmware update and debug purposes. The following table lists the required pins for JTAG connection.

The debug pins have pull-down and pull-up enabled by default, so leaving them enabled may increase current consumption if left connected to supply or ground. If enabling the JTAG pins the module must be power cycled to enable a SWD debug session.

Table 7.1. JTAG Pads

PAD NAME	PAD NUMBER	JTAG SIGNAL NAME	COMMENTS
PF3	24	TDI	This pin is disabled after reset. Once enabled the pin has a built-in pull-up.
PF2	23	TDO	This pin is disabled after reset
PF1	22	TMS	Pin is enabled after reset and has a built-in pull-up
PF0	21	TCK	Pin is enabled after reset and has a built-in pull-down

7.3.2 Packet Trace Interface (PTI)

The ARTIK 030 integrates a true PHY-level PTI with the MAC, allowing complete, non-intrusive capture of all packets to and from the EFR32 Wireless STK development tools.

8. Pin Definitions

8.1 Pin Definitions

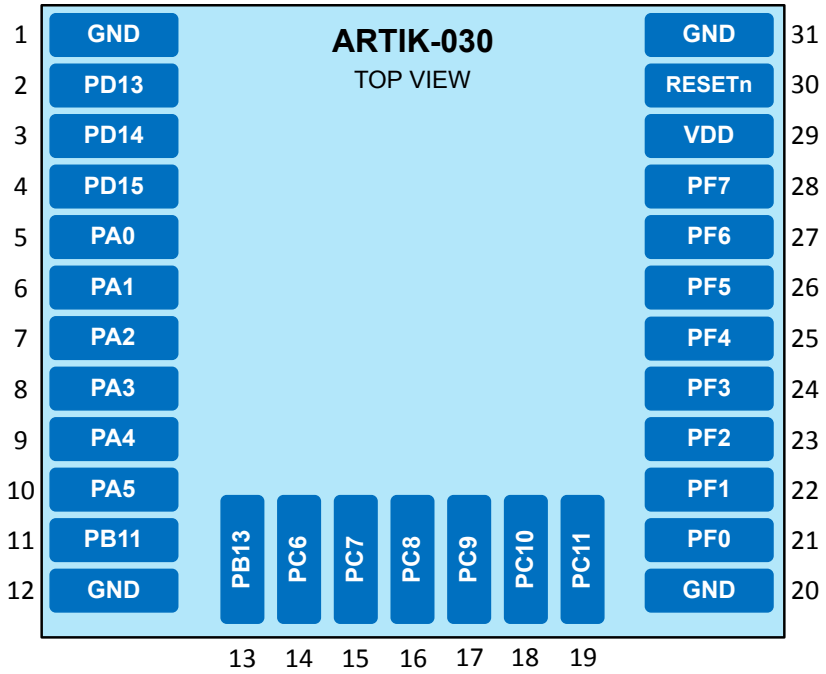

Figure 8.1. ARTIK 030 Pinout

Table 8.1. Device Pinout

ARTIK 030		Pin Alternate Functionality / Description				
Pin #	**Pin Name**	**Analog**	**Timers**	**Communication**	**Radio**	**Other**
1	**GND**	Ground				
2	**PD13**	BUSCY [ADC0: APORT3YCH5 ACMP0: APORT3YCH5 ACMP1: APORT3YCH5 IDAC0: APORT1YCH5] BUSDX [ADC0: APORT4XCH5 ACMP0: APORT4XCH5 ACMP1: APORT4XCH5]	TIM0_CC0 #21 TIM0_CC1 #20 TIM0_CC2 #19 TIM0_CDTI0 #18 TIM0_CDTI1 #17 TIM0_CDTI2 #16 TIM1_CC0 #21 TIM1_CC1 #20 TIM1_CC2 #19 TIM1_CC3 #18 LE-TIM0_OUT0 #21 LETIM0_OUT1 #20 PCNT0_S0IN #21 PCNT0_S1IN #20	US0_TX #21 US0_RX #20 US0_CLK #19 US0_CS #18 US0_CTS #17 US0_RTS #16 US1_TX #21 US1_RX #20 US1_CLK #19 US1_CS #18 US1_CTS #17 US1_RTS #16 LEU0_TX #21 LEU0_RX #20 I2C0_SDA #21 I2C0_SCL #20	FRC_DCLK #21 FRC_DOUT #20 FRC_DFRAME #19 MODEM_DCLK #21 MODEM_DIN #20 MO-DEM_DOUT #19 MODEM_ANT0 #18 MO-DEM_ANT1 #17	PRS_CH3 #12 PRS_CH4 #4 PRS_CH5 #3 PRS_CH6 #15 ACMP0_O #21 ACMP1_O #21
3	**PD14**	BUSCX [ADC0: APORT3XCH6 ACMP0: APORT3XCH6 ACMP1: APORT3XCH6 IDAC0: APORT1XCH6] BUSDY [ADC0: APORT4YCH6 ACMP0: APORT4YCH6 ACMP1: APORT4YCH6]	TIM0_CC0 #22 TIM0_CC1 #21 TIM0_CC2 #20 TIM0_CDTI0 #19 TIM0_CDTI1 #18 TIM0_CDTI2 #17 TIM1_CC0 #22 TIM1_CC1 #21 TIM1_CC2 #20 TIM1_CC3 #19 LE-TIM0_OUT0 #22 LETIM0_OUT1 #21 PCNT0_S0IN #22 PCNT0_S1IN #21	US0_TX #22 US0_RX #21 US0_CLK #20 US0_CS #19 US0_CTS #18 US0_RTS #17 US1_TX #22 US1_RX #21 US1_CLK #20 US1_CS #19 US1_CTS #18 US1_RTS #17 LEU0_TX #22 LEU0_RX #21 I2C0_SDA #22 I2C0_SCL #21	FRC_DCLK #22 FRC_DOUT #21 FRC_DFRAME #20 MODEM_DCLK #22 MODEM_DIN #21 MO-DEM_DOUT #20 MODEM_ANT0 #19 MO-DEM_ANT1 #18	CMU_CLK0 #5 PRS_CH3 #13 PRS_CH4 #5 PRS_CH5 #4 PRS_CH6 #16 ACMP0_O #22 ACMP1_O #22 GPIO_EM4WU4
4	**PD15**	BUSCY [ADC0: APORT3YCH7 ACMP0: APORT3YCH7 ACMP1: APORT3YCH7 IDAC0: APORT1YCH7] BUSDX [ADC0: APORT4XCH7 ACMP0: APORT4XCH7 ACMP1: APORT4XCH7]	TIM0_CC0 #23 TIM0_CC1 #22 TIM0_CC2 #21 TIM0_CDTI0 #20 TIM0_CDTI1 #19 TIM0_CDTI2 #18 TIM1_CC0 #23 TIM1_CC1 #22 TIM1_CC2 #21 TIM1_CC3 #20 LE-TIM0_OUT0 #23 LETIM0_OUT1 #22 PCNT0_S0IN #23 PCNT0_S1IN #22	US0_TX #23 US0_RX #22 US0_CLK #21 US0_CS #20 US0_CTS #19 US0_RTS #18 US1_TX #23 US1_RX #22 US1_CLK #21 US1_CS #20 US1_CTS #19 US1_RTS #18 LEU0_TX #23 LEU0_RX #22 I2C0_SDA #23 I2C0_SCL #22	FRC_DCLK #23 FRC_DOUT #22 FRC_DFRAME #21 MODEM_DCLK #23 MODEM_DIN #22 MO-DEM_DOUT #21 MODEM_ANT0 #20 MO-DEM_ANT1 #19	CMU_CLK1 #5 PRS_CH3 #14 PRS_CH4 #6 PRS_CH5 #5 PRS_CH6 #17 ACMP0_O #23 ACMP1_O #23 DBG_SWO #2

ARTIK 030		Pin Alternate Functionality / Description				
Pin #	Pin Name	Analog	Timers	Communication	Radio	Other
5	**PA0**	ADC0_EXTN BUSCX [ADC0: APORT3XCH8 ACMP0: APORT3XCH8 ACMP1: APORT3XCH8 IDAC0: APORT1XCH8] BUSDY [ADC0: APORT4YCH8 ACMP0: APORT4YCH8 ACMP1: APORT4YCH8]	TIM0_CC0 #0 TIM0_CC1 #31 TIM0_CC2 #30 TIM0_CDTI0 #29 TIM0_CDTI1 #28 TIM0_CDTI2 #27 TIM1_CC0 #0 TIM1_CC1 #31 TIM1_CC2 #30 TIM1_CC3 #29 LE-TIM0_OUT0 #0 LE-TIM0_OUT1 #31 PCNT0_S0IN #0 PCNT0_S1IN #31	US0_TX #0 US0_RX #31 US0_CLK #30 US0_CS #29 US0_CTS #28 US0_RTS #27 US1_TX #0 US1_RX #31 US1_CLK #30 US1_CS #29 US1_CTS #28 US1_RTS #27 LEU0_TX #0 LEU0_RX #31 I2C0_SDA #0 I2C0_SCL #31	FRC_DCLK #0 FRC_DOUT #31 FRC_DFRAME #30 MODEM_DCLK #0 MODEM_DIN #31 MODEM_DOUT #30 MO-DEM_ANT0 #29 MODEM_ANT1 #28	CMU_CLK1 #0 PRS_CH6 #0 PRS_CH7 #10 PRS_CH8 #9 PRS_CH9 #8 ACMP0_O #0 ACMP1_O #0
6	**PA1**	ADC0_EXTP BUSCY [ADC0: APORT3YCH9 ACMP0: APORT3YCH9 ACMP1: APORT3YCH9 IDAC0: APORT1YCH9] BUSDX [ADC0: APORT4XCH9 ACMP0: APORT4XCH9 ACMP1: APORT4XCH9]	TIM0_CC0 #1 TIM0_CC1 #0 TIM0_CC2 #31 TIM0_CDTI0 #30 TIM0_CDTI1 #29 TIM0_CDTI2 #28 TIM1_CC0 #1 TIM1_CC1 #0 TIM1_CC2 #31 TIM1_CC3 #30 LE-TIM0_OUT0 #1 LE-TIM0_OUT1 #0 PCNT0_S0IN #1 PCNT0_S1IN #0	US0_TX #1 US0_RX #0 US0_CLK #31 US0_CS #30 US0_CTS #29 US0_RTS #28 US1_TX #1 US1_RX #0 US1_CLK #31 US1_CS #30 US1_CTS #29 US1_RTS #28 LEU0_TX #1 LEU0_RX #0 I2C0_SDA #1 I2C0_SCL #0	FRC_DCLK #1 FRC_DOUT #0 FRC_DFRAME #31 MODEM_DCLK #1 MODEM_DIN #0 MODEM_DOUT #31 MO-DEM_ANT0 #30 MODEM_ANT1 #29	CMU_CLK0 #0 PRS_CH6 #1 PRS_CH7 #0 PRS_CH8 #10 PRS_CH9 #9 ACMP0_O #1 ACMP1_O #1
7	**PA2**	BUSCX [ADC0: APORT3XCH10 ACMP0: APORT3XCH10 ACMP1: APORT3XCH10 IDAC0: APORT1XCH10] BUSDY [ADC0: APORT4YCH10 ACMP0: APORT4YCH10 ACMP1: APORT4YCH10]	TIM0_CC0 #2 TIM0_CC1 #1 TIM0_CC2 #0 TIM0_CDTI0 #31 TIM0_CDTI1 #30 TIM0_CDTI2 #29 TIM1_CC0 #2 TIM1_CC1 #1 TIM1_CC2 #0 TIM1_CC3 #31 LE-TIM0_OUT0 #2 LE-TIM0_OUT1 #1 PCNT0_S0IN #2 PCNT0_S1IN #1	US0_TX #2 US0_RX #1 US0_CLK #0 US0_CS #31 US0_CTS #30 US0_RTS #29 US1_TX #2 US1_RX #1 US1_CLK #0 US1_CS #31 US1_CTS #30 US1_RTS #29 LEU0_TX #2 LEU0_RX #1 I2C0_SDA #2 I2C0_SCL #1	FRC_DCLK #2 FRC_DOUT #1 FRC_DFRAME #0 MODEM_DCLK #2 MODEM_DIN #1 MODEM_DOUT #0 MODEM_ANT0 #31 MO-DEM_ANT1 #30	PRS_CH6 #2 PRS_CH7 #1 PRS_CH8 #0 PRS_CH9 #10 ACMP0_O #2 ACMP1_O #2

ARTIK 030		Pin Alternate Functionality / Description				
Pin #	**Pin Name**	**Analog**	**Timers**	**Communication**	**Radio**	**Other**
8	**PA3**	BUSCY [ADC0: APORT3YCH11 ACMP0: APORT3YCH11 ACMP1: APORT3YCH11 IDAC0: APORT1YCH11] BUSDX [ADC0: APORT4XCH11 ACMP0: APORT4XCH11 ACMP1: APORT4XCH11]	TIM0_CC0 #3 TIM0_CC1 #2 TIM0_CC2 #1 TIM0_CDTI0 #0 TIM0_CDTI1 #31 TIM0_CDTI2 #30 TIM1_CC0 #3 TIM1_CC1 #2 TIM1_CC2 #1 TIM1_CC3 #0 LE-TIM0_OUT0 #3 LE-TIM0_OUT1 #2 PCNT0_S0IN #3 PCNT0_S1IN #2	US0_TX #3 US0_RX #2 US0_CLK #1 US0_CS #0 US0_CTS #31 US0_RTS #30 US1_TX #3 US1_RX #2 US1_CLK #1 US1_CS #0 US1_CTS #31 US1_RTS #30 LEU0_TX #3 LEU0_RX #2 I2C0_SDA #3 I2C0_SCL #2	FRC_DCLK #3 FRC_DOUT #2 FRC_DFRAME #1 MODEM_DCLK #3 MODEM_DIN #2 MODEM_DOUT #1 MODEM_ANT0 #0 MODEM_ANT1 #31	PRS_CH6 #3 PRS_CH7 #2 PRS_CH8 #1 PRS_CH9 #0 ACMP0_O #3 ACMP1_O #3 GPIO_EM4WU8
9	**PA4**	BUSCX [ADC0: APORT3XCH12 ACMP0: APORT3XCH12 ACMP1: APORT3XCH12 IDAC0: APORT1XCH12] BUSDY [ADC0: APORT4YCH12 ACMP0: APORT4YCH12 ACMP1: APORT4YCH12]	TIM0_CC0 #4 TIM0_CC1 #3 TIM0_CC2 #2 TIM0_CDTI0 #1 TIM0_CDTI1 #0 TIM0_CDTI2 #31 TIM1_CC0 #4 TIM1_CC1 #3 TIM1_CC2 #2 TIM1_CC3 #1 LE-TIM0_OUT0 #4 LE-TIM0_OUT1 #3 PCNT0_S0IN #4 PCNT0_S1IN #3	US0_TX #4 US0_RX #3 US0_CLK #2 US0_CS #1 US0_CTS #0 US0_RTS #31 US1_TX #4 US1_RX #3 US1_CLK #2 US1_CS #1 US1_CTS #0 US1_RTS #31 LEU0_TX #4 LEU0_RX #3 I2C0_SDA #4 I2C0_SCL #3	FRC_DCLK #4 FRC_DOUT #3 FRC_DFRAME #2 MODEM_DCLK #4 MODEM_DIN #3 MODEM_DOUT #2 MODEM_ANT0 #1 MODEM_ANT1 #0	PRS_CH6 #4 PRS_CH7 #3 PRS_CH8 #2 PRS_CH9 #1 ACMP0_O #4 ACMP1_O #4
10	**PA5**	BUSCY [ADC0: APORT3YCH13 ACMP0: APORT3YCH13 ACMP1: APORT3YCH13 IDAC0: APORT1YCH13] BUSDX [ADC0: APORT4XCH13 ACMP0: APORT4XCH13 ACMP1: APORT4XCH13]	TIM0_CC0 #5 TIM0_CC1 #4 TIM0_CC2 #3 TIM0_CDTI0 #2 TIM0_CDTI1 #1 TIM0_CDTI2 #0 TIM1_CC0 #5 TIM1_CC1 #4 TIM1_CC2 #3 TIM1_CC3 #2 LE-TIM0_OUT0 #5 LE-TIM0_OUT1 #4 PCNT0_S0IN #5 PCNT0_S1IN #4	US0_TX #5 US0_RX #4 US0_CLK #3 US0_CS #2 US0_CTS #1 US0_RTS #0 US1_TX #5 US1_RX #4 US1_CLK #3 US1_CS #2 US1_CTS #1 US1_RTS #0 LEU0_TX #5 LEU0_RX #4 I2C0_SDA #5 I2C0_SCL #4	FRC_DCLK #5 FRC_DOUT #4 FRC_DFRAME #3 MODEM_DCLK #5 MODEM_DIN #4 MODEM_DOUT #3 MODEM_ANT0 #2 MODEM_ANT1 #1	PRS_CH6 #5 PRS_CH7 #4 PRS_CH8 #3 PRS_CH9 #2 ACMP0_O #5 ACMP1_O #5

ARTIK 030		Pin Alternate Functionality / Description				
Pin #	**Pin Name**	**Analog**	**Timers**	**Communication**	**Radio**	**Other**
11	**PB11**	BUSCY [ADC0: APORT3YCH27 ACMP0: APORT3YCH27 ACMP1: APORT3YCH27 IDAC0: APORT1YCH27] BUSDX [ADC0: APORT4XCH27 ACMP0: APORT4XCH27 ACMP1: APORT4XCH27]	TIM0_CC0 #6 TIM0_CC1 #5 TIM0_CC2 #4 TIM0_CDTI0 #3 TIM0_CDTI1 #2 TIM0_CDTI2 #1 TIM1_CC0 #6 TIM1_CC1 #5 TIM1_CC2 #4 TIM1_CC3 #3 LE-TIM0_OUT0 #6 LE-TIM0_OUT1 #5 PCNT0_S0IN #6 PCNT0_S1IN #5	US0_TX #6 US0_RX #5 US0_CLK #4 US0_CS #3 US0_CTS #2 US0_RTS #1 US1_TX #6 US1_RX #5 US1_CLK #4 US1_CS #3 US1_CTS #2 US1_RTS #1 LEU0_TX #6 LEU0_RX #5 I2C0_SDA #6 I2C0_SCL #5	FRC_DCLK #6 FRC_DOUT #5 FRC_DFRAME #4 MODEM_DCLK #6 MODEM_DIN #5 MODEM_DOUT #4 MODEM_ANT0 #3 MODEM_ANT1 #2	PRS_CH6 #6 PRS_CH7 #5 PRS_CH8 #4 PRS_CH9 #3 ACMP0_O #6 ACMP1_O #6
12	**GND**	Ground				
13	**PB13**	BUSCY [ADC0: APORT3YCH29 ACMP0: APORT3YCH29 ACMP1: APORT3YCH29 IDAC0: APORT1YCH29] BUSDX [ADC0: APORT4XCH29 ACMP0: APORT4XCH29 ACMP1: APORT4XCH29]	TIM0_CC0 #8 TIM0_CC1 #7 TIM0_CC2 #6 TIM0_CDTI0 #5 TIM0_CDTI1 #4 TIM0_CDTI2 #3 TIM1_CC0 #8 TIM1_CC1 #7 TIM1_CC2 #6 TIM1_CC3 #5 LE-TIM0_OUT0 #8 LE-TIM0_OUT1 #7 PCNT0_S0IN #8 PCNT0_S1IN #7	US0_TX #8 US0_RX #7 US0_CLK #6 US0_CS #5 US0_CTS #4 US0_RTS #3 US1_TX #8 US1_RX #7 US1_CLK #6 US1_CS #5 US1_CTS #4 US1_RTS #3 LEU0_TX #8 LEU0_RX #7 I2C0_SDA #8 I2C0_SCL #7	FRC_DCLK #8 FRC_DOUT #7 FRC_DFRAME #6 MODEM_DCLK #8 MODEM_DIN #7 MODEM_DOUT #6 MODEM_ANT0 #5 MODEM_ANT1 #4	PRS_CH6 #8 PRS_CH7 #7 PRS_CH8 #6 PRS_CH9 #5 ACMP0_O #8 ACMP1_O #8 DBG_SWO #1 GPIO_EM4WU9
14	**PC6**	BUSAX [ADC0: APORT1XCH6 ACMP0: APORT1XCH6 ACMP1: APORT1XCH6] BUSBY [ADC0: APORT2YCH6 ACMP0: APORT2YCH6 ACMP1: APORT2YCH6]	TIM0_CC0 #11 TIM0_CC1 #10 TIM0_CC2 #9 TIM0_CDTI0 #8 TIM0_CDTI1 #7 TIM0_CDTI2 #6 TIM1_CC0 #11 TIM1_CC1 #10 TIM1_CC2 #9 TIM1_CC3 #8 LE-TIM0_OUT0 #11 LETIM0_OUT1 #10 PCNT0_S0IN #11 PCNT0_S1IN #10	US0_TX #11 US0_RX #10 US0_CLK #9 US0_CS #8 US0_CTS #7 US0_RTS #6 US1_TX #11 US1_RX #10 US1_CLK #9 US1_CS #8 US1_CTS #7 US1_RTS #6 LEU0_TX #11 LEU0_RX #10 I2C0_SDA #11 I2C0_SCL #10	FRC_DCLK #11 FRC_DOUT #10 FRC_DFRAME #9 MODEM_DCLK #11 MODEM_DIN #10 MO-DEM_DOUT #9 MODEM_ANT0 #8 MODEM_ANT1 #7	CMU_CLK0 #2 PRS_CH0 #8 PRS_CH9 #11 PRS_CH10 #0 PRS_CH11 #5 ACMP0_O #11 ACMP1_O #11

ARTIK 030		Pin Alternate Functionality / Description				
Pin #	**Pin Name**	**Analog**	**Timers**	**Communication**	**Radio**	**Other**
15	**PC7**	BUSAY [ADC0: APORT1YCH7 ACMP0: APORT1YCH7 ACMP1: APORT1YCH7] BUSBX [ADC0: APORT2XCH7 ACMP0: APORT2XCH7 ACMP1: APORT2XCH7]	TIM0_CC0 #12 TIM0_CC1 #11 TIM0_CC2 #10 TIM0_CDTI0 #9 TIM0_CDTI1 #8 TIM0_CDTI2 #7 TIM1_CC0 #12 TIM1_CC1 #11 TIM1_CC2 #10 TIM1_CC3 #9 LE-TIM0_OUT0 #12 LETIM0_OUT1 #11 PCNT0_S0IN #12 PCNT0_S1IN #11	US0_TX #12 US0_RX #11 US0_CLK #10 US0_CS #9 US0_CTS #8 US0_RTS #7 US1_TX #12 US1_RX #11 US1_CLK #10 US1_CS #9 US1_CTS #8 US1_RTS #7 LEU0_TX #12 LEU0_RX #11 I2C0_SDA #12 I2C0_SCL #11	FRC_DCLK #12 FRC_DOUT #11 FRC_DFRAME #10 MODEM_DCLK #12 MODEM_DIN #11 MO-DEM_DOUT #10 MODEM_ANT0 #9 MODEM_ANT1 #8	CMU_CLK1 #2 PRS_CH0 #9 PRS_CH9 #12 PRS_CH10 #1 PRS_CH11 #0 ACMP0_O #12 ACMP1_O #12
16	**PC8**	BUSAX [ADC0: APORT1XCH8 ACMP0: APORT1XCH8 ACMP1: APORT1XCH8] BUSBY [ADC0: APORT2YCH8 ACMP0: APORT2YCH8 ACMP1: APORT2YCH8]	TIM0_CC0 #13 TIM0_CC1 #12 TIM0_CC2 #11 TIM0_CDTI0 #10 TIM0_CDTI1 #9 TIM0_CDTI2 #8 TIM1_CC0 #13 TIM1_CC1 #12 TIM1_CC2 #11 TIM1_CC3 #10 LE-TIM0_OUT0 #13 LETIM0_OUT1 #12 PCNT0_S0IN #13 PCNT0_S1IN #12	US0_TX #13 US0_RX #12 US0_CLK #11 US0_CS #10 US0_CTS #9 US0_RTS #8 US1_TX #13 US1_RX #12 US1_CLK #11 US1_CS #10 US1_CTS #9 US1_RTS #8 LEU0_TX #13 LEU0_RX #12 I2C0_SDA #13 I2C0_SCL #12	FRC_DCLK #13 FRC_DOUT #12 FRC_DFRAME #11 MODEM_DCLK #13 MODEM_DIN #12 MO-DEM_DOUT #11 MODEM_ANT0 #10 MO-DEM_ANT1 #9	PRS_CH0 #10 PRS_CH9 #13 PRS_CH10 #2 PRS_CH11 #1 ACMP0_O #13 ACMP1_O #13
17	**PC9**	BUSAY [ADC0: APORT1YCH9 ACMP0: APORT1YCH9 ACMP1: APORT1YCH9] BUSBX [ADC0: APORT2XCH9 ACMP0: APORT2XCH9 ACMP1: APORT2XCH9]	TIM0_CC0 #14 TIM0_CC1 #13 TIM0_CC2 #12 TIM0_CDTI0 #11 TIM0_CDTI1 #10 TIM0_CDTI2 #9 TIM1_CC0 #14 TIM1_CC1 #13 TIM1_CC2 #12 TIM1_CC3 #11 LE-TIM0_OUT0 #14 LETIM0_OUT1 #13 PCNT0_S0IN #14 PCNT0_S1IN #13	US0_TX #14 US0_RX #13 US0_CLK #12 US0_CS #11 US0_CTS #10 US0_RTS #9 US1_TX #14 US1_RX #13 US1_CLK #12 US1_CS #11 US1_CTS #10 US1_RTS #9 LEU0_TX #14 LEU0_RX #13 I2C0_SDA #14 I2C0_SCL #13	FRC_DCLK #14 FRC_DOUT #13 FRC_DFRAME #12 MODEM_DCLK #14 MODEM_DIN #13 MO-DEM_DOUT #12 MODEM_ANT0 #11 MO-DEM_ANT1 #10	PRS_CH0 #11 PRS_CH9 #14 PRS_CH10 #3 PRS_CH11 #2 ACMP0_O #14 ACMP1_O #14

ARTIK 030		Pin Alternate Functionality / Description				
Pin #	**Pin Name**	**Analog**	**Timers**	**Communication**	**Radio**	**Other**
18	**PC10**	BUSAX [ADC0: APORT1XCH10 ACMP0: APORT1XCH10 ACMP1: APORT1XCH10] BUSBY [ADC0: APORT2YCH10 ACMP0: APORT2YCH10 ACMP1: APORT2YCH10]	TIM0_CC0 #15 TIM0_CC1 #14 TIM0_CC2 #13 TIM0_CDTI0 #12 TIM0_CDTI1 #11 TIM0_CDTI2 #10 TIM1_CC0 #15 TIM1_CC1 #14 TIM1_CC2 #13 TIM1_CC3 #12 LE-TIM0_OUT0 #15 LETIM0_OUT1 #14 PCNT0_S0IN #15 PCNT0_S1IN #14	US0_TX #15 US0_RX #14 US0_CLK #13 US0_CS #12 US0_CTS #11 US0_RTS #10 US1_TX #15 US1_RX #14 US1_CLK #13 US1_CS #12 US1_CTS #11 US1_RTS #10 LEU0_TX #15 LEU0_RX #14 I2C0_SDA #15 I2C0_SCL #14	FRC_DCLK #15 FRC_DOUT #14 FRC_DFRAME #13 MODEM_DCLK #15 MODEM_DIN #14 MO-DEM_DOUT #13 MODEM_ANT0 #12 MO-DEM_ANT1 #11	CMU_CLK1 #3 PRS_CH0 #12 PRS_CH9 #15 PRS_CH10 #4 PRS_CH11 #3 ACMP0_O #15 ACMP1_O #15 GPIO_EM4WU12
19	**PC11**	BUSAY [ADC0: APORT1YCH11 ACMP0: APORT1YCH11 ACMP1: APORT1YCH11] BUSBX [ADC0: APORT2XCH11 ACMP0: APORT2XCH11 ACMP1: APORT2XCH11]	TIM0_CC0 #16 TIM0_CC1 #15 TIM0_CC2 #14 TIM0_CDTI0 #13 TIM0_CDTI1 #12 TIM0_CDTI2 #11 TIM1_CC0 #16 TIM1_CC1 #15 TIM1_CC2 #14 TIM1_CC3 #13 LE-TIM0_OUT0 #16 LETIM0_OUT1 #15 PCNT0_S0IN #16 PCNT0_S1IN #15	US0_TX #16 US0_RX #15 US0_CLK #14 US0_CS #13 US0_CTS #12 US0_RTS #11 US1_TX #16 US1_RX #15 US1_CLK #14 US1_CS #13 US1_CTS #12 US1_RTS #11 LEU0_TX #16 LEU0_RX #15 I2C0_SDA #16 I2C0_SCL #15	FRC_DCLK #16 FRC_DOUT #15 FRC_DFRAME #14 MODEM_DCLK #16 MODEM_DIN #15 MO-DEM_DOUT #14 MODEM_ANT0 #13 MO-DEM_ANT1 #12	CMU_CLK0 #3 PRS_CH0 #13 PRS_CH9 #16 PRS_CH10 #5 PRS_CH11 #4 ACMP0_O #16 ACMP1_O #16 DBG_SWO #3
20	**GND**	Ground				
21	**PF0**	BUSAX [ADC0: APORT1XCH16 ACMP0: APORT1XCH16 ACMP1: APORT1XCH16] BUSBY [ADC0: APORT2YCH16 ACMP0: APORT2YCH16 ACMP1: APORT2YCH16]	TIM0_CC0 #24 TIM0_CC1 #23 TIM0_CC2 #22 TIM0_CDTI0 #21 TIM0_CDTI1 #20 TIM0_CDTI2 #19 TIM1_CC0 #24 TIM1_CC1 #23 TIM1_CC2 #22 TIM1_CC3 #21 LE-TIM0_OUT0 #24 LETIM0_OUT1 #23 PCNT0_S0IN #24 PCNT0_S1IN #23	US0_TX #24 US0_RX #23 US0_CLK #22 US0_CS #21 US0_CTS #20 US0_RTS #19 US1_TX #24 US1_RX #23 US1_CLK #22 US1_CS #21 US1_CTS #20 US1_RTS #19 LEU0_TX #24 LEU0_RX #23 I2C0_SDA #24 I2C0_SCL #23	FRC_DCLK #24 FRC_DOUT #23 FRC_DFRAME #22 MODEM_DCLK #24 MODEM_DIN #23 MO-DEM_DOUT #22 MODEM_ANT0 #21 MO-DEM_ANT1 #20	PRS_CH0 #0 PRS_CH1 #7 PRS_CH2 #6 PRS_CH3 #5 ACMP0_O #24 ACMP1_O #24 DBG_SWCLKTCK #0

ARTIK 030		Pin Alternate Functionality / Description				
Pin #	**Pin Name**	**Analog**	**Timers**	**Communication**	**Radio**	**Other**
22	**PF1**	BUSAY [ADC0: APORT1YCH17 ACMP0: APORT1YCH17 ACMP1: APORT1YCH17] BUSBX [ADC0: APORT2XCH17 ACMP0: APORT2XCH17 ACMP1: APORT2XCH17]	TIM0_CC0 #25 TIM0_CC1 #24 TIM0_CC2 #23 TIM0_CDTI0 #22 TIM0_CDTI1 #21 TIM0_CDTI2 #20 TIM1_CC0 #25 TIM1_CC1 #24 TIM1_CC2 #23 TIM1_CC3 #22 LE-TIM0_OUT0 #25 LETIM0_OUT1 #24 PCNT0_S0IN #25 PCNT0_S1IN #24	US0_TX #25 US0_RX #24 US0_CLK #23 US0_CS #22 US0_CTS #21 US0_RTS #20 US1_TX #25 US1_RX #24 US1_CLK #23 US1_CS #22 US1_CTS #21 US1_RTS #20 LEU0_TX #25 LEU0_RX #24 I2C0_SDA #25 I2C0_SCL #24	FRC_DCLK #25 FRC_DOUT #24 FRC_DFRAME #23 MODEM_DCLK #25 MODEM_DIN #24 MO-DEM_DOUT #23 MODEM_ANT0 #22 MO-DEM_ANT1 #21	PRS_CH0 #1 PRS_CH1 #0 PRS_CH2 #7 PRS_CH3 #6 ACMP0_O #25 ACMP1_O #25 DBG_SWDIOTMS #0
23	**PF2**	BUSAX [ADC0: APORT1XCH18 ACMP0: APORT1XCH18 ACMP1: APORT1XCH18] BUSBY [ADC0: APORT2YCH18 ACMP0: APORT2YCH18 ACMP1: APORT2YCH18]	TIM0_CC0 #26 TIM0_CC1 #25 TIM0_CC2 #24 TIM0_CDTI0 #23 TIM0_CDTI1 #22 TIM0_CDTI2 #21 TIM1_CC0 #26 TIM1_CC1 #25 TIM1_CC2 #24 TIM1_CC3 #23 LE-TIM0_OUT0 #26 LETIM0_OUT1 #25 PCNT0_S0IN #26 PCNT0_S1IN #25	US0_TX #26 US0_RX #25 US0_CLK #24 US0_CS #23 US0_CTS #22 US0_RTS #21 US1_TX #26 US1_RX #25 US1_CLK #24 US1_CS #23 US1_CTS #22 US1_RTS #21 LEU0_TX #26 LEU0_RX #25 I2C0_SDA #26 I2C0_SCL #25	FRC_DCLK #26 FRC_DOUT #25 FRC_DFRAME #24 MODEM_DCLK #26 MODEM_DIN #25 MO-DEM_DOUT #24 MODEM_ANT0 #23 MO-DEM_ANT1 #22	CMU_CLK0 #6 PRS_CH0 #2 PRS_CH1 #1 PRS_CH2 #0 PRS_CH3 #7 ACMP0_O #26 ACMP1_O #26 DBG_TDO #0 DBG_SWO #0 GPIO_EM4WU0
24	**PF3**	BUSAY [ADC0: APORT1YCH19 ACMP0: APORT1YCH19 ACMP1: APORT1YCH19] BUSBX [ADC0: APORT2XCH19 ACMP0: APORT2XCH19 ACMP1: APORT2XCH19]	TIM0_CC0 #27 TIM0_CC1 #26 TIM0_CC2 #25 TIM0_CDTI0 #24 TIM0_CDTI1 #23 TIM0_CDTI2 #22 TIM1_CC0 #27 TIM1_CC1 #26 TIM1_CC2 #25 TIM1_CC3 #24 LE-TIM0_OUT0 #27 LETIM0_OUT1 #26 PCNT0_S0IN #27 PCNT0_S1IN #26	US0_TX #27 US0_RX #26 US0_CLK #25 US0_CS #24 US0_CTS #23 US0_RTS #22 US1_TX #27 US1_RX #26 US1_CLK #25 US1_CS #24 US1_CTS #23 US1_RTS #22 LEU0_TX #27 LEU0_RX #26 I2C0_SDA #27 I2C0_SCL #26	FRC_DCLK #27 FRC_DOUT #26 FRC_DFRAME #25 MODEM_DCLK #27 MODEM_DIN #26 MO-DEM_DOUT #25 MODEM_ANT0 #24 MO-DEM_ANT1 #23	CMU_CLK1 #6 PRS_CH0 #3 PRS_CH1 #2 PRS_CH2 #1 PRS_CH3 #0 ACMP0_O #27 ACMP1_O #27 DBG_TDI #0

ARTIK 030		Pin Alternate Functionality / Description				
Pin #	**Pin Name**	**Analog**	**Timers**	**Communication**	**Radio**	**Other**
25	**PF4**	BUSAX [ADC0: APORT1XCH20 ACMP0: APORT1XCH20 ACMP1: APORT1XCH20] BUSBY [ADC0: APORT2YCH20 ACMP0: APORT2YCH20 ACMP1: APORT2YCH20]	TIM0_CC0 #28 TIM0_CC1 #27 TIM0_CC2 #26 TIM0_CDTI0 #25 TIM0_CDTI1 #24 TIM0_CDTI2 #23 TIM1_CC0 #28 TIM1_CC1 #27 TIM1_CC2 #26 TIM1_CC3 #25 LE-TIM0_OUT0 #28 LETIM0_OUT1 #27 PCNT0_S0IN #28 PCNT0_S1IN #27	US0_TX #28 US0_RX #27 US0_CLK #26 US0_CS #25 US0_CTS #24 US0_RTS #23 US1_TX #28 US1_RX #27 US1_CLK #26 US1_CS #25 US1_CTS #24 US1_RTS #23 LEU0_TX #28 LEU0_RX #27 I2C0_SDA #28 I2C0_SCL #27	FRC_DCLK #28 FRC_DOUT #27 FRC_DFRAME #26 MODEM_DCLK #28 MODEM_DIN #27 MO-DEM_DOUT #26 MODEM_ANT0 #25 MO-DEM_ANT1 #24	PRS_CH0 #4 PRS_CH1 #3 PRS_CH2 #2 PRS_CH3 #1 ACMP0_O #28 ACMP1_O #28
26	**PF5**	BUSAY [ADC0: APORT1YCH21 ACMP0: APORT1YCH21 ACMP1: APORT1YCH21] BUSBX [ADC0: APORT2XCH21 ACMP0: APORT2XCH21 ACMP1: APORT2XCH21]	TIM0_CC0 #29 TIM0_CC1 #28 TIM0_CC2 #27 TIM0_CDTI0 #26 TIM0_CDTI1 #25 TIM0_CDTI2 #24 TIM1_CC0 #29 TIM1_CC1 #28 TIM1_CC2 #27 TIM1_CC3 #26 LE-TIM0_OUT0 #29 LETIM0_OUT1 #28 PCNT0_S0IN #29 PCNT0_S1IN #28	US0_TX #29 US0_RX #28 US0_CLK #27 US0_CS #26 US0_CTS #25 US0_RTS #24 US1_TX #29 US1_RX #28 US1_CLK #27 US1_CS #26 US1_CTS #25 US1_RTS #24 LEU0_TX #29 LEU0_RX #28 I2C0_SDA #29 I2C0_SCL #28	FRC_DCLK #29 FRC_DOUT #28 FRC_DFRAME #27 MODEM_DCLK #29 MODEM_DIN #28 MO-DEM_DOUT #27 MODEM_ANT0 #26 MO-DEM_ANT1 #25	PRS_CH0 #5 PRS_CH1 #4 PRS_CH2 #3 PRS_CH3 #2 ACMP0_O #29 ACMP1_O #29
27	**PF6**	BUSAX [ADC0: APORT1XCH22 ACMP0: APORT1XCH22 ACMP1: APORT1XCH22] BUSBY [ADC0: APORT2YCH22 ACMP0: APORT2YCH22 ACMP1: APORT2YCH22]	TIM0_CC0 #30 TIM0_CC1 #29 TIM0_CC2 #28 TIM0_CDTI0 #27 TIM0_CDTI1 #26 TIM0_CDTI2 #25 TIM1_CC0 #30 TIM1_CC1 #29 TIM1_CC2 #28 TIM1_CC3 #27 LE-TIM0_OUT0 #30 LETIM0_OUT1 #29 PCNT0_S0IN #30 PCNT0_S1IN #29	US0_TX #30 US0_RX #29 US0_CLK #28 US0_CS #27 US0_CTS #26 US0_RTS #25 US1_TX #30 US1_RX #29 US1_CLK #28 US1_CS #27 US1_CTS #26 US1_RTS #25 LEU0_TX #30 LEU0_RX #29 I2C0_SDA #30 I2C0_SCL #29	FRC_DCLK #30 FRC_DOUT #29 FRC_DFRAME #28 MODEM_DCLK #30 MODEM_DIN #29 MO-DEM_DOUT #28 MODEM_ANT0 #27 MO-DEM_ANT1 #26	CMU_CLK1 #7 PRS_CH0 #6 PRS_CH1 #5 PRS_CH2 #4 PRS_CH3 #3 ACMP0_O #30 ACMP1_O #30

ARTIK 030		Pin Alternate Functionality / Description				
Pin #	**Pin Name**	**Analog**	**Timers**	**Communication**	**Radio**	**Other**
28	**PF7**	BUSAY [ADC0: APORT1YCH23 ACMP0: APORT1YCH23 ACMP1: APORT1YCH23] BUSBX [ADC0: APORT2XCH23 ACMP0: APORT2XCH23 ACMP1: APORT2XCH23]	TIM0_CC0 #31 TIM0_CC1 #30 TIM0_CC2 #29 TIM0_CDTI0 #28 TIM0_CDTI1 #27 TIM0_CDTI2 #26 TIM1_CC0 #31 TIM1_CC1 #30 TIM1_CC2 #29 TIM1_CC3 #28 LE-TIM0_OUT0 #31 LETIM0_OUT1 #30 PCNT0_S0IN #31 PCNT0_S1IN #30	US0_TX #31 US0_RX #30 US0_CLK #29 US0_CS #28 US0_CTS #27 US0_RTS #26 US1_TX #31 US1_RX #30 US1_CLK #29 US1_CS #28 US1_CTS #27 US1_RTS #26 LEU0_TX #31 LEU0_RX #30 I2C0_SDA #31 I2C0_SCL #30	FRC_DCLK #31 FRC_DOUT #30 FRC_DFRAME #29 MODEM_DCLK #31 MODEM_DIN #30 MO-DEM_DOUT #29 MODEM_ANT0 #28 MO-DEM_ANT1 #27	CMU_CLK0 #7 PRS_CH0 #7 PRS_CH1 #6 PRS_CH2 #5 PRS_CH3 #4 ACMP0_O #31 ACMP1_O #31 GPIO_EM4WU1
29	**VDD**	Module power supply				
30	**RESETn**	Reset input, active low.To apply an external reset source to this pin, it is required to only drive this pin low during reset, and let the internal pull-up ensure that reset is released.				
31	**GND**	Ground				

8.1.1 GPIO Overview

The GPIO pins are organized as 16-bit ports indicated by letters A through F, and the individual pins on each port are indicated by a number from 15 down to 0.

Table 8.2. GPIO Pinout

Port	Pin 15	Pin 14	Pin 13	Pin 12	Pin 11	Pin 10	Pin 9	Pin 8	Pin 7	Pin 6	Pin 5	Pin 4	Pin 3	Pin 2	Pin 1	Pin 0
Port A	-	-	-	-	-	-	-	-	-	-	PA5 (5V)	PA4 (5V)	PA3 (5V)	PA2 (5V)	PA1	PA0
Port B			PB13 (5V)		PB11 (5V)	-	-	-	-	-	-	-	-	-	-	-
Port C	-	-	-	-	PC11 (5V)	PC10 (5V)	PC9 (5V)	PC8 (5V)	PC7 (5V)	PC6 (5V)	-	-	-	-	-	-
Port D	PD15 (5V)	PD14 (5V)	PD13 (5V)				-	-	-	-	-	-	-	-	-	-
Port E	-	-	-	-	-	-	-	-	-	-	-	-	-	-	-	-
Port F	-	-	-	-	-	-	-	-	PF7 (5V)	PF6 (5V)	PF5 (5V)	PF4 (5V)	PF3 (5V)	PF2 (5V)	PF1 (5V)	PF0 (5V)

Note:

1. GPIO with 5V tolerance are indicated by (5V).
2. The pins PA4, PA3, PA2, PB13, PB11, PD15, PD14, and PD13 will not be 5V tolerant on all future devices. In order to preserve upgrade options with full hardware compatibility, do not use these pins on 5V domains.

8.2 Alternate Functionality Pinout

A wide selection of alternate functionality is available for multiplexing to various pins. The following table shows the name of the alternate functionality in the first column, followed by columns showing the possible LOCATION bitfield settings.

Note: Some functionality, such as analog interfaces, do not have alternate settings or a LOCATION bitfield. In these cases, the pinout is shown in the column corresponding to LOCATION 0.

Table 8.3. Alternate Functionality Overview

Alternate	LOCATION								
Functionality	0 - 3	4 - 7	8 - 11	12 - 15	16 - 19	20 - 23	24 - 27	28 - 31	Description
ACMP0_O	0: PA0 1: PA1	6: PB11	8: PB13	15: PC10	16: PC11	21: PD13 22: PD14 23: PD15	24: PF0 25: PF1 26: PF2 27: PF3		Analog comparator ACMP0, digital output.
ACMP1_O	0: PA0 1: PA1	6: PB11	8: PB13	15: PC10	16: PC11	21: PD13 22: PD14 23: PD15	24: PF0 25: PF1 26: PF2 27: PF3		Analog comparator ACMP1, digital output.
ADC0_EXTN	0: PA0								Analog to digital converter ADC0 external reference input negative pin
ADC0_EXTP	0: PA1								Analog to digital converter ADC0 external reference input positive pin
CMU_CLK0	0: PA1 3: PC11	5: PD14 6: PF2							Clock Management Unit, clock output number 0.
CMU_CLK1	0: PA0 3: PC10	5: PD15 6: PF3							Clock Management Unit, clock output number 1.
DBG_SWCLKTCK	0: PF0								Debug-interface Serial Wire clock input and JTAG Test Clock. Note that this function is enabled to the pin out of reset, and has a built-in pull down.
DBG_SWDIOTMS	0: PF1								Debug-interface Serial Wire data input / output and JTAG Test Mode Select. Note that this function is enabled to the pin out of reset, and has a built-in pull up.

Alternate	LOCATION								
Functionality	0 - 3	4 - 7	8 - 11	12 - 15	16 - 19	20 - 23	24 - 27	28 - 31	Description
DBG_SWO	0: PF2 1: PB13 2: PD15 3: PC11								Debug-interface Serial Wire viewer Output. Note that this function is not enabled after reset, and must be enabled by software to be used.
DBG_TDI	0: PF3								Debug-interface JTAG Test Data In. Note that this function is enabled to pin out of reset, and has a built-in pull up.
DBG_TDO	0: PF2								Debug-interface JTAG Test Data Out. Note that this function is enabled to pin out of reset.
FRC_DCLK	0: PA0 1: PA1	6: PB11	8: PB13	15: PC10	16: PC11	21: PD13 22: PD14 23: PD15	24: PF0 25: PF1 26: PF2 27: PF3		Frame Controller, Data Sniffer Clock.
FRC_DFRAME		4: PB11 6: PB13		13: PC10 14: PC11	19: PD13	20: PD14 21: PD15 22: PF0 23: PF1	24: PF2 25: PF3	30: PA0 31: PA1	Frame Controller, Data Sniffer Frame active
FRC_DOUT	0: PA1	5: PB11 7: PB13		14: PC10 15: PC11		20: PD13 21: PD14 22: PD15 23: PF0	24: PF1 25: PF2 26: PF3	31: PA0	Frame Controller, Data Sniffer Output.
GPIO_EM4WU0	0: PF2								Pin can be used to wake the system up from EM4
GPIO_EM4WU1									Pin can be used to wake the system up from EM4
GPIO_EM4WU4	0: PD14								Pin can be used to wake the system up from EM4
GPIO_EM4WU8									Pin can be used to wake the system up from EM4

Alternate	LOCATION								
Functionality	0 - 3	4 - 7	8 - 11	12 - 15	16 - 19	20 - 23	24 - 27	28 - 31	Description
GPIO_EM4WU9	0: PB13								Pin can be used to wake the system up from EM4
GPIO_EM4WU12	0: PC10								Pin can be used to wake the system up from EM4
I2C0_SCL	0: PA1	5: PB11 7: PB13		14: PC10 15: PC11		20: PD13 21: PD14 22: PD15 23: PF0	24: PF1 25: PF2 26: PF3	31: PA0	I2C0 Serial Clock Line input / output.
I2C0_SDA	0: PA0 1: PA1	6: PB11	8: PB13	15: PC10	16: PC11	21: PD13 22: PD14 23: PD15	24: PF0 25: PF1 26: PF2 27: PF3		I2C0 Serial Data input / output.
LETIM0_OUT0	0: PA0 1: PA1	6: PB11	8: PB13	15: PC10	16: PC11	21: PD13 22: PD14 23: PD15	24: PF0 25: PF1 26: PF2 27: PF3		Low Energy Timer LETIM0, output channel 0.
LETIM0_OUT1	0: PA1	5: PB11 7: PB13		14: PC10 15: PC11		20: PD13 21: PD14 22: PD15 23: PF0	24: PF1 25: PF2 26: PF3	31: PA0	Low Energy Timer LETIM0, output channel 1.
LEU0_RX	0: PA1	5: PB11 7: PB13		14: PC10 15: PC11		20: PD13 21: PD14 22: PD15 23: PF0	24: PF1 25: PF2 26: PF3	31: PA0	LEUART0 Receive input.
LEU0_TX	0: PA0 1: PA1	6: PB11	8: PB13	15: PC10	16: PC11	21: PD13 22: PD14 23: PD15	24: PF0 25: PF1 26: PF2 27: PF3		LEUART0 Transmit output. Also used as receive input in half duplex communication.
MODEM_DCLK	0: PA0 1: PA1	6: PB11	8: PB13	15: PC10	16: PC11	21: PD13 22: PD14 23: PD15	24: PF0 25: PF1 26: PF2 27: PF3		MODEM data clock out.
MODEM_DIN	0: PA1	5: PB11 7: PB13		14: PC10 15: PC11		20: PD13 21: PD14 22: PD15 23: PF0	24: PF1 25: PF2 26: PF3	31: PA0	MODEM data in.
MODEM_DOUT		4: PB11 6: PB13		13: PC10 14: PC11	19: PD13	20: PD14 21: PD15 22: PF0 23: PF1	24: PF2 25: PF3	30: PA0 31: PA1	MODEM data out.
PCNT0_S0IN	0: PA0 1: PA1	6: PB11	8: PB13	15: PC10	16: PC11	21: PD13 22: PD14 23: PD15	24: PF0 25: PF1 26: PF2 27: PF3		Pulse Counter PCNT0 input number 0.
PCNT0_S1IN	0: PA1	5: PB11 7: PB13		14: PC10 15: PC11		20: PD13 21: PD14 22: PD15 23: PF0	24: PF1 25: PF2 26: PF3	31: PA0	Pulse Counter PCNT0 input number 1.

Alternate	LOCATION								
Functionality	0 - 3	4 - 7	8 - 11	12 - 15	16 - 19	20 - 23	24 - 27	28 - 31	Description
PRS_CH0	0: PF0 1: PF1 2: PF2 3: PF3			12: PC10 13: PC11					Peripheral Reflex System PRS, channel 0.
PRS_CH1	0: PF1 1: PF2 2: PF3	7: PF0							Peripheral Reflex System PRS, channel 1.
PRS_CH2	0: PF2 1: PF3	6: PF0 7: PF1							Peripheral Reflex System PRS, channel 2.
PRS_CH3	0: PF3	5: PF0 6: PF1 7: PF2		12: PD13 13: PD14 14: PD15					Peripheral Reflex System PRS, channel 3.
PRS_CH4		4: PD13 5: PD14 6: PD15							Peripheral Reflex System PRS, channel 4.
PRS_CH5	3: PD13	4: PD14 5: PD15							Peripheral Reflex System PRS, channel 5.
PRS_CH6	0: PA0 1: PA1	6: PB11	8: PB13	15: PD13	16: PD14 17: PD15				Peripheral Reflex System PRS, channel 6.
PRS_CH7	0: PA1	5: PB11 7: PB13	10: PA0						Peripheral Reflex System PRS, channel 7.
PRS_CH8		4: PB11 6: PB13	9: PA0 10: PA1						Peripheral Reflex System PRS, channel 8.
PRS_CH9	3: PB11	5: PB13	8: PA0 9: PA1	15: PC10	16: PC11				Peripheral Reflex System PRS, channel 9.
PRS_CH10		4: PC10 5: PC11							Peripheral Reflex System PRS, channel 10.
PRS_CH11	3: PC10	4: PC11							Peripheral Reflex System PRS, channel 11.
TIM0_CC0	0: PA0 1: PA1	6: PB11	8: PB13	15: PC10	16: PC11	21: PD13 22: PD14 23: PD15	24: PF0 25: PF1 26: PF2 27: PF3		Timer 0 Capture Compare input / output channel 0.

Alternate	LOCATION								
Functionality	0 - 3	4 - 7	8 - 11	12 - 15	16 - 19	20 - 23	24 - 27	28 - 31	Description
TIM0_CC1	0: PA1	5: PB11 7: PB13		14: PC10 15: PC11		20: PD13 21: PD14 22: PD15 23: PF0	24: PF1 25: PF2 26: PF3	31: PA0	Timer 0 Capture Compare input / output channel 1.
TIM0_CC2		4: PB11 6: PB13		13: PC10 14: PC11	19: PD13	20: PD14 21: PD15 22: PF0 23: PF1	24: PF2 25: PF3	30: PA0 31: PA1	Timer 0 Capture Compare input / output channel 2.
TIM0_CDTI0	3: PB11	5: PB13		12: PC10 13: PC11	18: PD13 19: PD14	20: PD15 21: PF0 22: PF1 23: PF2	24: PF3	29: PA0 30: PA1	Timer 0 Compli-mentary Dead Time Insertion channel 0.
TIM0_CDTI1	2: PB11	4: PB13	11: PC10	12: PC11	17: PD13 18: PD14 19: PD15	20: PF0 21: PF1 22: PF2 23: PF3		28: PA0 29: PA1	Timer 0 Compli-mentary Dead Time Insertion channel 1.
TIM0_CDTI2	1: PB11 3: PB13		10: PC10 11: PC11		16: PD13 17: PD14 18: PD15 19: PF0	20: PF1 21: PF2 22: PF3	27: PA0	28: PA1	Timer 0 Compli-mentary Dead Time Insertion channel 2.
TIM1_CC0	0: PA0 1: PA1	6: PB11	8: PB13	15: PC10	16: PC11	21: PD13 22: PD14 23: PD15	24: PF0 25: PF1 26: PF2 27: PF3		Timer 1 Capture Compare input / output channel 0.
TIM1_CC1	0: PA1	5: PB11 7: PB13		14: PC10 15: PC11		20: PD13 21: PD14 22: PD15 23: PF0	24: PF1 25: PF2 26: PF3	31: PA0	Timer 1 Capture Compare input / output channel 1.
TIM1_CC2		4: PB11 6: PB13		13: PC10 14: PC11	19: PD13	20: PD14 21: PD15 22: PF0 23: PF1	24: PF2 25: PF3	30: PA0 31: PA1	Timer 1 Capture Compare input / output channel 2.
TIM1_CC3	3: PB11	5: PB13		12: PC10 13: PC11	18: PD13 19: PD14	20: PD15 21: PF0 22: PF1 23: PF2	24: PF3	29: PA0 30: PA1	Timer 1 Capture Compare input / output channel 3.
US0_CLK		4: PB11 6: PB13		13: PC10 14: PC11	19: PD13	20: PD14 21: PD15 22: PF0 23: PF1	24: PF2 25: PF3	30: PA0 31: PA1	USART0 clock in-put / output.
US0_CS	3: PB11	5: PB13		12: PC10 13: PC11	18: PD13 19: PD14	20: PD15 21: PF0 22: PF1 23: PF2	24: PF3	29: PA0 30: PA1	USART0 chip se-lect input / output.
US0_CTS	2: PB11	4: PB13	11: PC10	12: PC11	17: PD13 18: PD14 19: PD15	20: PF0 21: PF1 22: PF2 23: PF3		28: PA0 29: PA1	USART0 Clear To Send hardware flow control input.
US0_RTS	1: PB11 3: PB13		10: PC10 11: PC11		16: PD13 17: PD14 18: PD15 19: PF0	20: PF1 21: PF2 22: PF3	27: PA0	28: PA1	USART0 Request To Send hardware flow control output.

Alternate	LOCATION								
Functionality	0 - 3	4 - 7	8 - 11	12 - 15	16 - 19	20 - 23	24 - 27	28 - 31	Description
US0_RX	0: PA1	5: PB11 7: PB13		14: PC10 15: PC11		20: PD13 21: PD14 22: PD15 23: PF0	24: PF1 25: PF2 26: PF3	31: PA0	USART0 Asynchronous Receive. USART0 Synchronous mode Master Input / Slave Output (MISO).
US0_TX	0: PA0 1: PA1	6: PB11	8: PB13	15: PC10	16: PC11	21: PD13 22: PD14 23: PD15	24: PF0 25: PF1 26: PF2 27: PF3		USART0 Asynchronous Transmit. Also used as receive input in half duplex communication. USART0 Synchronous mode Master Output / Slave Input (MOSI).
US1_CLK		4: PB11 6: PB13		13: PC10 14: PC11	19: PD13	20: PD14 21: PD15 22: PF0 23: PF1	24: PF2 25: PF3	30: PA0 31: PA1	USART1 clock input / output.
US1_CS	3: PB11	5: PB13		12: PC10 13: PC11	18: PD13 19: PD14	20: PD15 21: PF0 22: PF1 23: PF2	24: PF3	29: PA0 30: PA1	USART1 chip select input / output.
US1_CTS	2: PB11	4: PB13	11: PC10	12: PC11	17: PD13 18: PD14 19: PD15	20: PF0 21: PF1 22: PF2 23: PF3		28: PA0 29: PA1	USART1 Clear To Send hardware flow control input.
US1_RTS	1: PB11 3: PB13		10: PC10 11: PC11		16: PD13 17: PD14 18: PD15 19: PF0	20: PF1 21: PF2 22: PF3	27: PA0	28: PA1	USART1 Request To Send hardware flow control output.
US1_RX	0: PA1	5: PB11 7: PB13		14: PC10 15: PC11		20: PD13 21: PD14 22: PD15 23: PF0	24: PF1 25: PF2 26: PF3	31: PA0	USART1 Asynchronous Receive. USART1 Synchronous mode Master Input / Slave Output (MISO).
US1_TX	0: PA0 1: PA1	6: PB11	8: PB13	15: PC10	16: PC11	21: PD13 22: PD14 23: PD15	24: PF0 25: PF1 26: PF2 27: PF3		USART1 Asynchronous Transmit. Also used as receive input in half duplex communication. USART1 Synchronous mode Master Output / Slave Input (MOSI).

8.3 Analog Port (APORT)

The Analog Port (APORT) is an infrastructure used to connect chip pins with on-chip analog clients such as analog comparators, ADCs, and DACs. The APORT consists of wires, switches, and control needed to configurably implement the routes. Please see the device Reference Manual for a complete description.

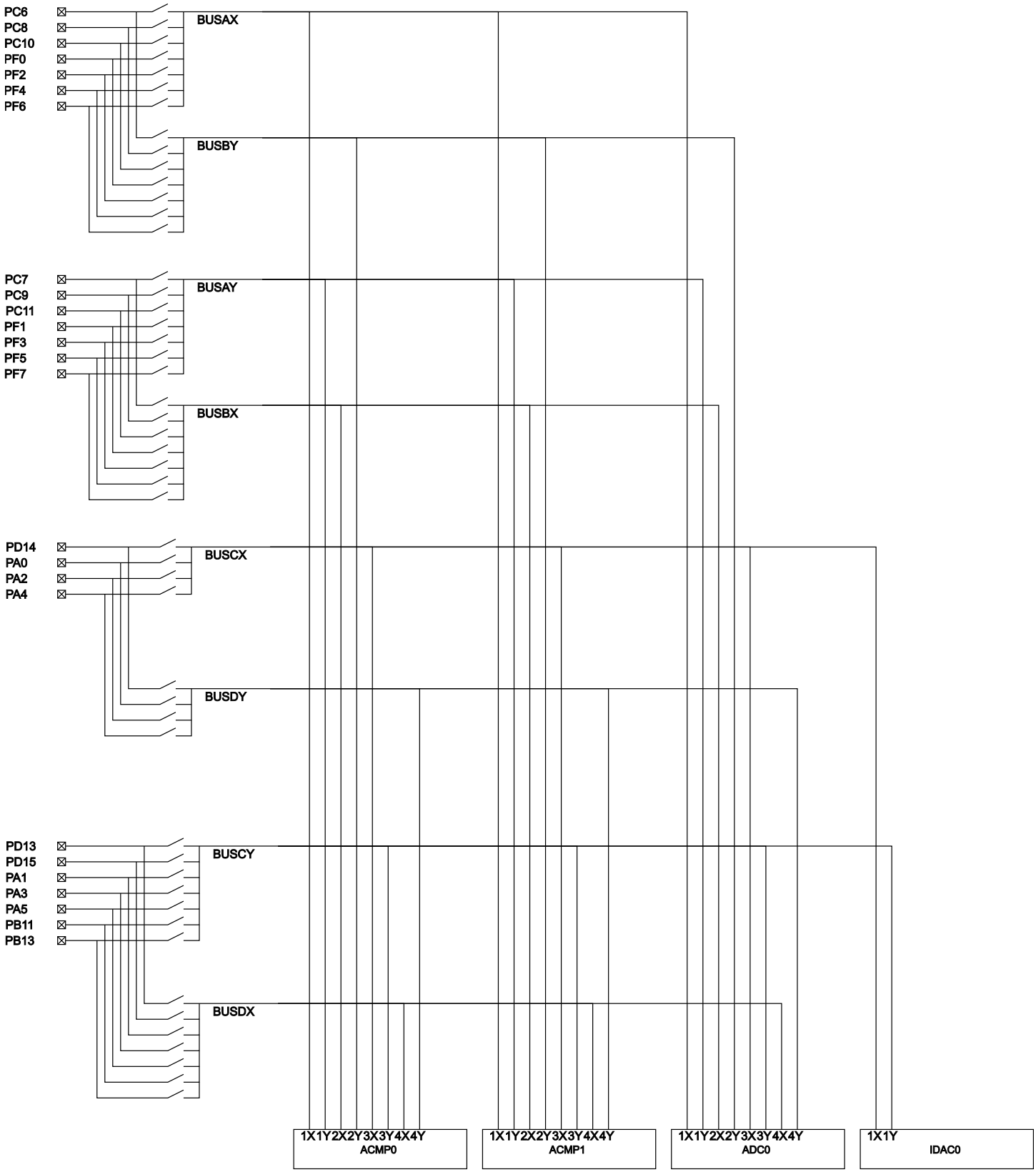

Figure 8.2. ARTIK 030 APORT

Table 8.4. APORT Client Map

Analog Module	Analog Module Channel	Shared Bus	Pin
ACMP0	APORT1XCH6	BUSAX	PC6
	APORT1XCH8		PC8
	APORT1XCH10		PC10
	APORT1XCH16		PF0
	APORT1XCH18		PF2
	APORT1XCH20		PF4
	APORT1XCH22		PF6
ACMP0	APORT1YCH7	BUSAY	PC7
	APORT1YCH9		PC9
	APORT1YCH11		PC11
	APORT1YCH17		PF1
	APORT1YCH19		PF3
	APORT1YCH21		PF5
	APORT1YCH23		PF7
ACMP0	APORT2XCH7	BUSBX	PC7
	APORT2XCH9		PC9
	APORT2XCH11		PC11
	APORT2XCH17		PF1
	APORT2XCH19		PF3
	APORT2XCH21		PF5
	APORT2XCH23		PF7
ACMP0	APORT2YCH6	BUSBY	PC6
	APORT2YCH8		PC8
	APORT2YCH10		PC10
	APORT2YCH16		PF0
	APORT2YCH18		PF2
	APORT2YCH20		PF4
	APORT2YCH22		PF6

Analog Module	Analog Module Channel	Shared Bus	Pin
ACMP0	APORT3XCH2	BUSCX	
	APORT3XCH4		
	APORT3XCH6		PD14
	APORT3XCH8		PA0
	APORT3XCH10		PA2
	APORT3XCH12		PA4
	APORT3XCH28		
	APORT3XCH30		
ACMP0	APORT3YCH3	BUSCY	
	APORT3YCH5		PD13
	APORT3YCH7		PD15
	APORT3YCH9		PA1
	APORT3YCH11		PA3
	APORT3YCH13		PA5
	APORT3YCH27		PB11
	APORT3YCH29		PB13
	APORT3YCH31		
ACMP0	APORT4XCH3	BUSDX	
	APORT4XCH5		PD13
	APORT4XCH7		PD15
	APORT4XCH9		PA1
	APORT4XCH11		PA3
	APORT4XCH13		PA5
	APORT4XCH27		PB11
	APORT4XCH29		PB13
	APORT4XCH31		
ACMP0	APORT4YCH2	BUSDY	
	APORT4YCH4		
	APORT4YCH6		PD14
	APORT4YCH8		PA0
	APORT4YCH10		PA2
	APORT4YCH12		PA4
	APORT4YCH28		
	APORT4YCH30		

Analog Module	Analog Module Channel	Shared Bus	Pin
ACMP1	APORT1XCH6	BUSAX	PC6
	APORT1XCH8		PC8
	APORT1XCH10		PC10
	APORT1XCH16		PF0
	APORT1XCH18		PF2
	APORT1XCH20		PF4
	APORT1XCH22		PF6
ACMP1	APORT1YCH7	BUSAY	PC7
	APORT1YCH9		PC9
	APORT1YCH11		PC11
	APORT1YCH17		PF1
	APORT1YCH19		PF3
	APORT1YCH21		PF5
	APORT1YCH23		PF7
ACMP1	APORT2XCH7	BUSBX	PC7
	APORT2XCH9		PC9
	APORT2XCH11		PC11
	APORT2XCH17		PF1
	APORT2XCH19		PF3
	APORT2XCH21		PF5
	APORT2XCH23		PF7
ACMP1	APORT2YCH6	BUSBY	PC6
	APORT2YCH8		PC8
	APORT2YCH10		PC10
	APORT2YCH16		PF0
	APORT2YCH18		PF2
	APORT2YCH20		PF4
	APORT2YCH22		PF6
ACMP1	APORT3XCH2	BUSCX	
	APORT3XCH4		
	APORT3XCH6		PD14
	APORT3XCH8		PA0
	APORT3XCH10		PA2
	APORT3XCH12		PA4
	APORT3XCH28		
	APORT3XCH30		

Analog Module	Analog Module Channel	Shared Bus	Pin
ACMP1	APORT3YCH3	BUSCY	
	APORT3YCH5		PD13
	APORT3YCH7		PD15
	APORT3YCH9		PA1
	APORT3YCH11		PA3
	APORT3YCH13		PA5
	APORT3YCH27		PB11
	APORT3YCH29		PB13
	APORT3YCH31		
ACMP1	APORT4XCH3	BUSDX	
	APORT4XCH5		PD13
	APORT4XCH7		PD15
	APORT4XCH9		PA1
	APORT4XCH11		PA3
	APORT4XCH13		PA5
	APORT4XCH27		PB11
	APORT4XCH29		PB13
	APORT4XCH31		
ACMP1	APORT4YCH2	BUSDY	
	APORT4YCH4		
	APORT4YCH6		PD14
	APORT4YCH8		PA0
	APORT4YCH10		PA2
	APORT4YCH12		PA4
	APORT4YCH28		
	APORT4YCH30		
ADC0	APORT1XCH6	BUSAX	PC6
	APORT1XCH8		PC8
	APORT1XCH10		PC10
	APORT1XCH16		PF0
	APORT1XCH18		PF2
	APORT1XCH20		PF4
	APORT1XCH22		PF6

Analog Module	Analog Module Channel	Shared Bus	Pin
ADC0	APORT1YCH7	BUSAY	PC7
	APORT1YCH9		PC9
	APORT1YCH11		PC11
	APORT1YCH17		PF1
	APORT1YCH19		PF3
	APORT1YCH21		PF5
	APORT1YCH23		PF7
ADC0	APORT2XCH7	BUSBX	PC7
	APORT2XCH9		PC9
	APORT2XCH11		PC11
	APORT2XCH17		PF1
	APORT2XCH19		PF3
	APORT2XCH21		PF5
	APORT2XCH23		PF7
ADC0	APORT2YCH6	BUSBY	PC6
	APORT2YCH8		PC8
	APORT2YCH10		PC10
	APORT2YCH16		PF0
	APORT2YCH18		PF2
	APORT2YCH20		PF4
	APORT2YCH22		PF6
ADC0	APORT3XCH2	BUSCX	
	APORT3XCH4		
	APORT3XCH6		PD14
	APORT3XCH8		PA0
	APORT3XCH10		PA2
	APORT3XCH12		PA4
	APORT3XCH28		
	APORT3XCH30		

Analog Module	Analog Module Channel	Shared Bus	Pin
ADC0	APORT3YCH3	BUSCY	
	APORT3YCH5		PD13
	APORT3YCH7		PD15
	APORT3YCH9		PA1
	APORT3YCH11		PA3
	APORT3YCH13		PA5
	APORT3YCH27		PB11
	APORT3YCH29		PB13
	APORT3YCH31		
ADC0	APORT4XCH3	BUSDX	
	APORT4XCH5		PD13
	APORT4XCH7		PD15
	APORT4XCH9		PA1
	APORT4XCH11		PA3
	APORT4XCH13		PA5
	APORT4XCH27		PB11
	APORT4XCH29		PB13
	APORT4XCH31		
ADC0	APORT4YCH2	BUSDY	
	APORT4YCH4		
	APORT4YCH6		PD14
	APORT4YCH8		PA0
	APORT4YCH10		PA2
	APORT4YCH12		PA4
	APORT4YCH28		
	APORT4YCH30		
IDAC0	APORT1XCH2	BUSCX	
	APORT1XCH4		
	APORT1XCH6		PD14
	APORT1XCH8		PA0
	APORT1XCH10		PA2
	APORT1XCH12		PA4
	APORT1XCH28		
	APORT1XCH30		

Analog Module	Analog Module Channel	Shared Bus	Pin
IDAC0	APORT1YCH3	BUSCY	
	APORT1YCH5		PD13
	APORT1YCH7		PD15
	APORT1YCH9		PA1
	APORT1YCH11		PA3
	APORT1YCH13		PA5
	APORT1YCH27		PB11
	APORT1YCH29		PB13
	APORT1YCH31		

9. Package Specifications

9.1 ARTIK 030 Dimensions

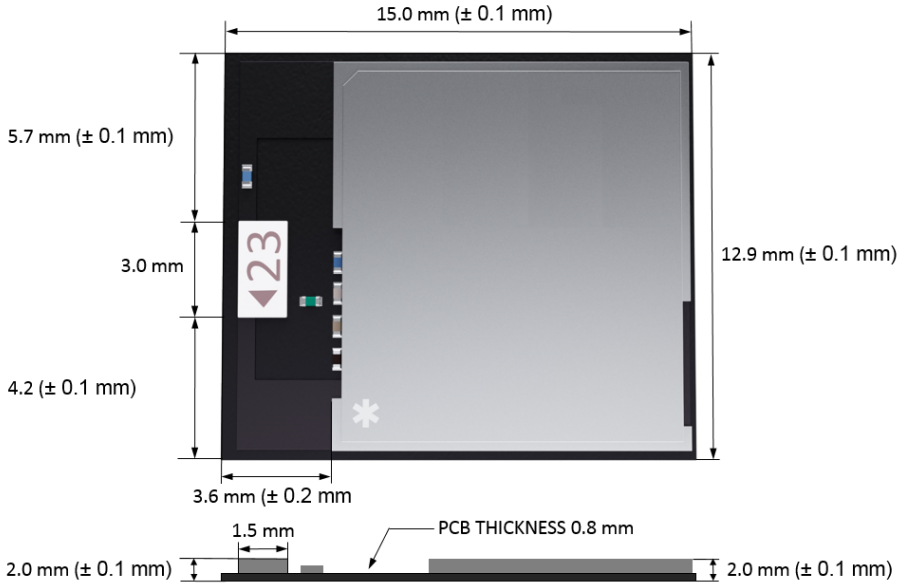

Figure 9.1. ARTIK 030A Package Dimensions

9.2 ARTIK 030 Module Footprint

The figure below shows the Module footprint and PCB dimensions.

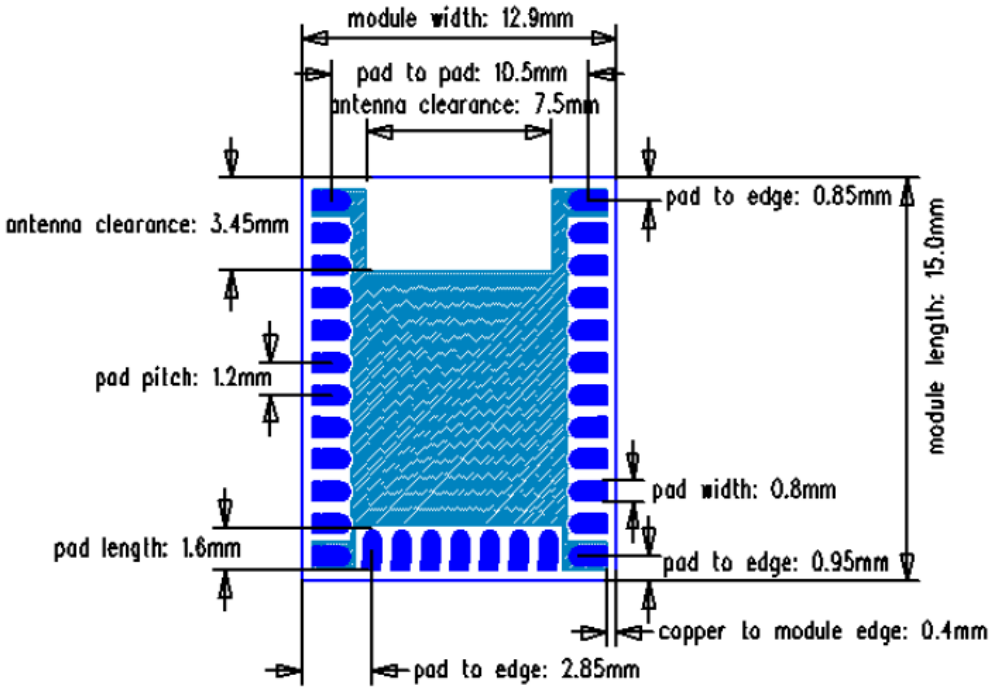

Figure 9.2. ARTIK 030 Footprint

9.3 ARTIK 030 Recommended PCB Land Pattern

The figure below shows the recommended land pattern.

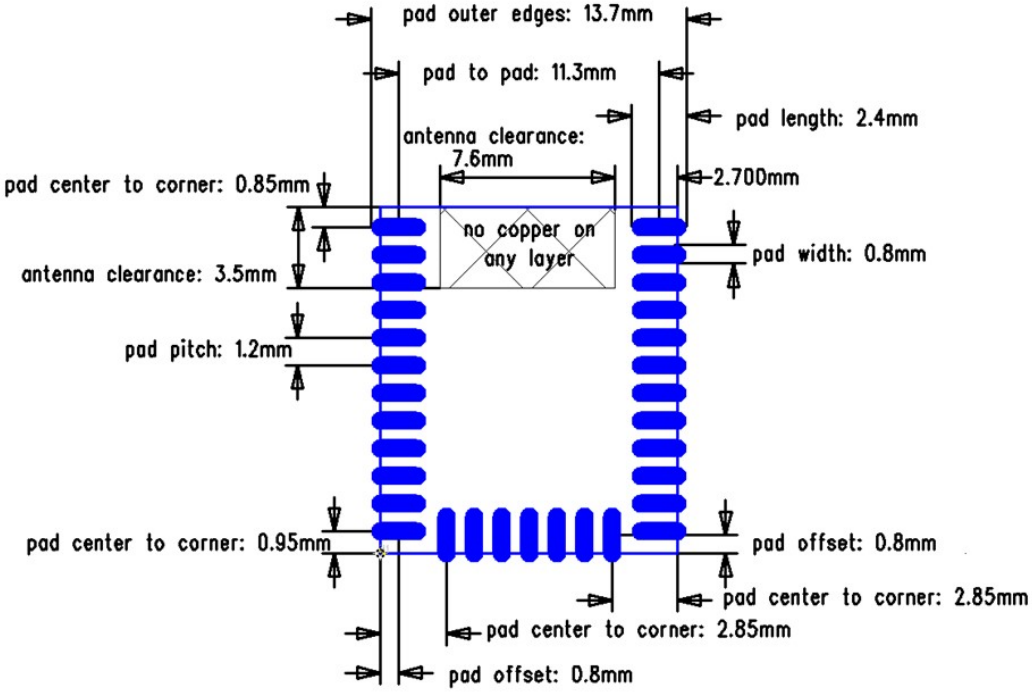

Figure 9.3. ARTIK 030 Recommended PCB Land Pattern

9.4 ARTIK 030 Package Marking

The figure below shows the Module markings printed on the RF-shield.

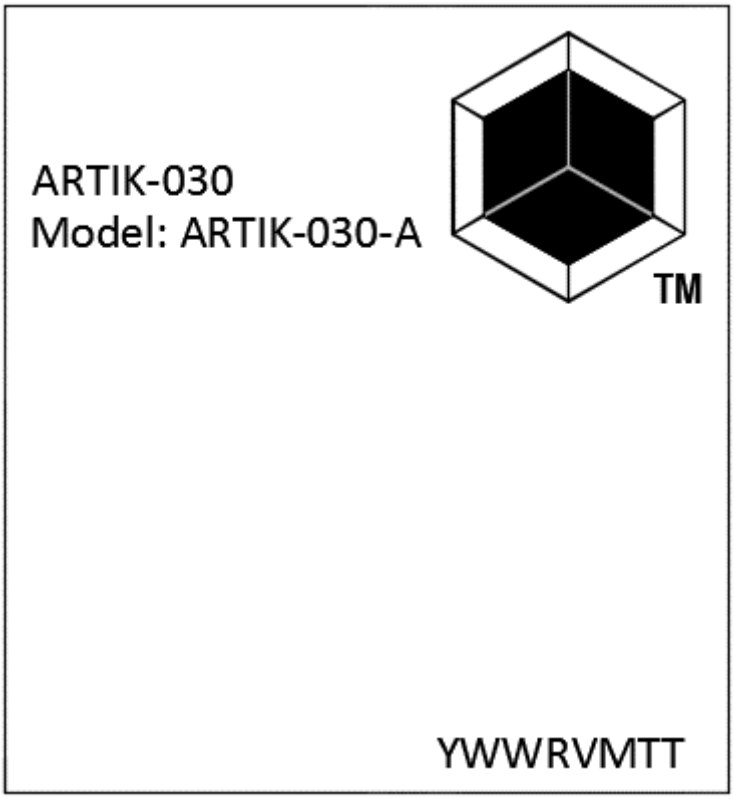

Figure 9.4. ARTIK 030 Package Marking

Mark Method:	Laser	
Shield Size: **X x Y**	10.75 x 11.70 mm	
Font Size:	0.70 mm Left-Justified	
Space between lines :	0.40 mm	
Distance from edge of package:	1.00 mm	
Line 1	Logo(HXW) : 4.00 x 3.5mm TM font: 0.45mm	TM
Line 2 Marking	Module Name	ARTIK-030-A-V1
Line 3 Marking:	Model Name	Model: ARTIK-030-A

Line 4 Marking:	YWWRVMTT	YY -Last digit of Year (e.g.: **6** for 201**6**) WW - Work Week (01-53) R - Major Revision (fixed character 1-9, A-Z, assigned by Silicon Labs) 1. Increment for major changes. Use QS7110-Product Change Action Board as guidance 2. Supplier initiated changes reviewed /managed by SLI CAB (W7111F2- Change Matrix for Suppliers) V - Minor Revision (fixed character 1-9, A-Z, assigned by Silicon Labs) M - Contract Manufacturer Site assigned by Silicon Labs TT - Unique Batch ID assigned by CM (2 characters A-Z)

10. Tape and Reel Specifications

10.1 Tape and Reel Packaging

This section contains information regarding the tape and reel packaging for the ARTIK 030.

10.2 Reel Material and Dimensions

- Reel material: Polystyrene (PS)
- Reel diameter: 13 inches (330 mm)
- Number of modules per reel: 1000 pcs
- Disk deformation, folding whitening and mold imperfections: Not allowed
- Disk set: consists of two 13 inch (330 mm) rotary round disks and one central axis (100 mm)
- Antistatic treatment: Required
- Surface resistivity: 10^4 - 10^9 Ω/sq.

Figure 10.1. Reel Dimensions - Side View

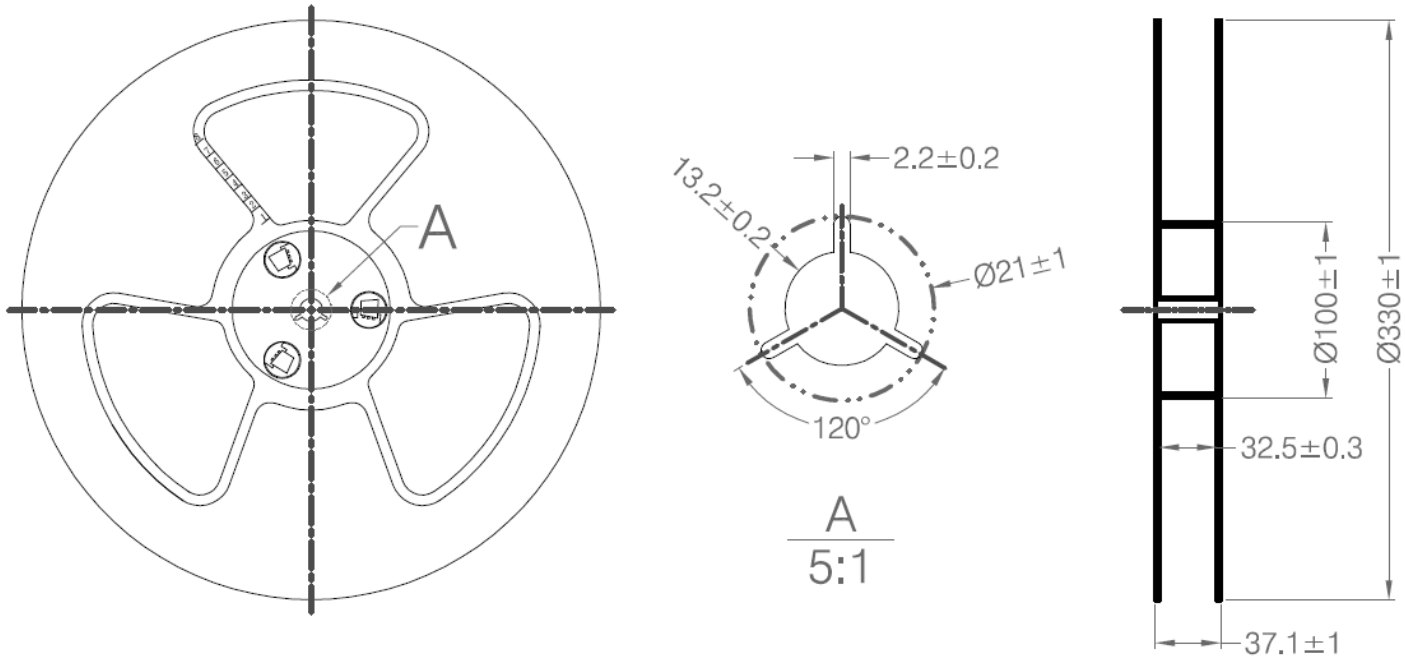

Symbol	Dimensions [mm]
W0	32.5 ± 0.3
W1	37.1 ± 1.0

10.3 Module Orientation and Tape Feed

The user direction of feed, start and end of tape on reel and orientation of the Modules on the tape are shown in the figures below.

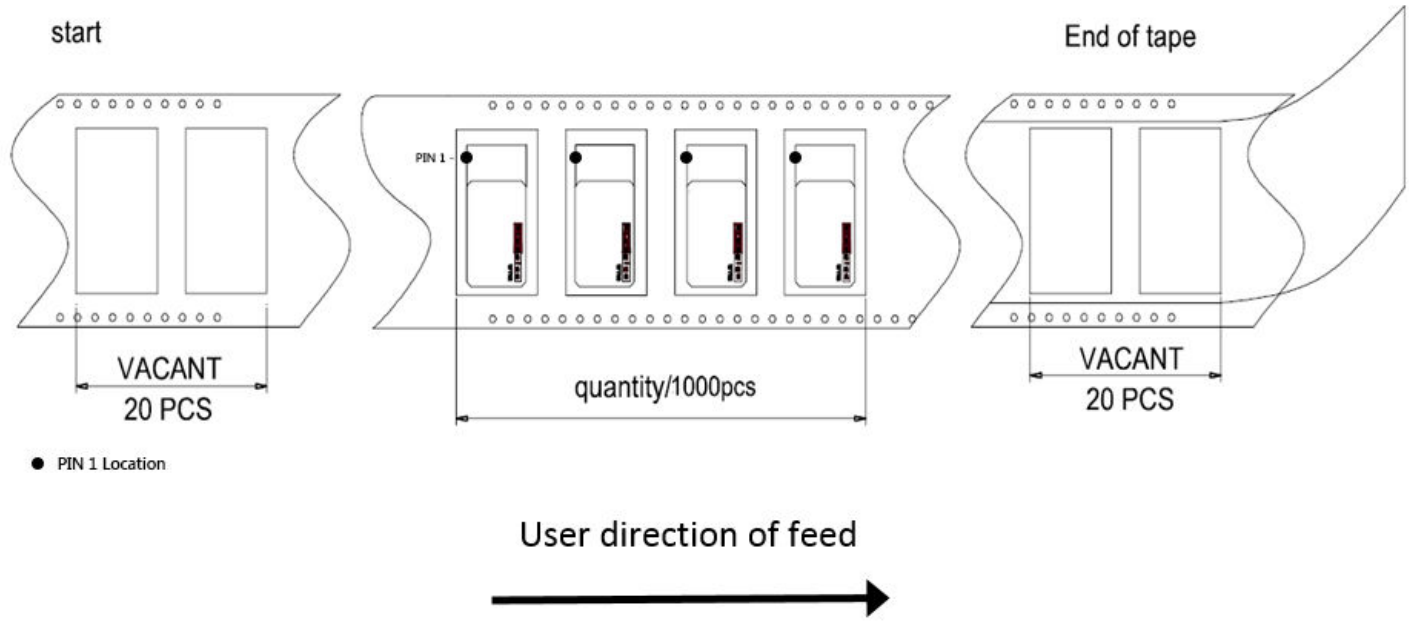

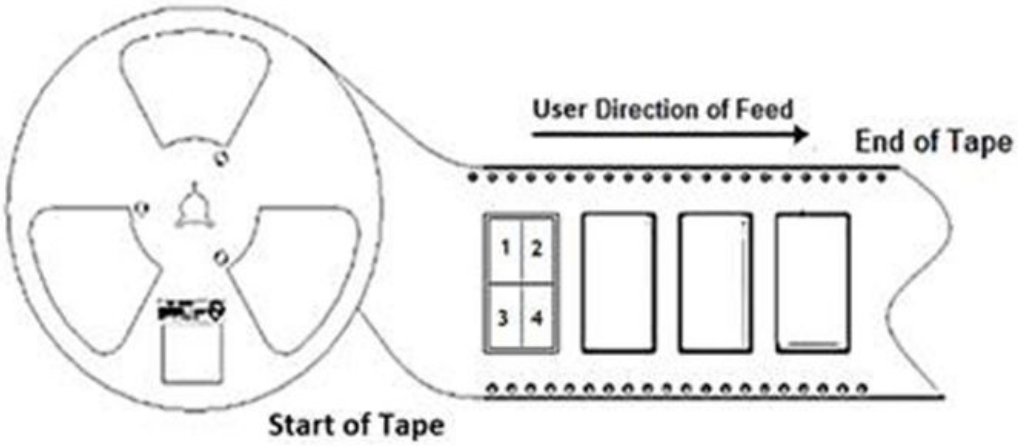

Figure 10.2. Module Orientation and Feed Direction

10.4 Tape and Reel Box Dimensions

Figure 10.3. Tape and Reel Box Dimensions

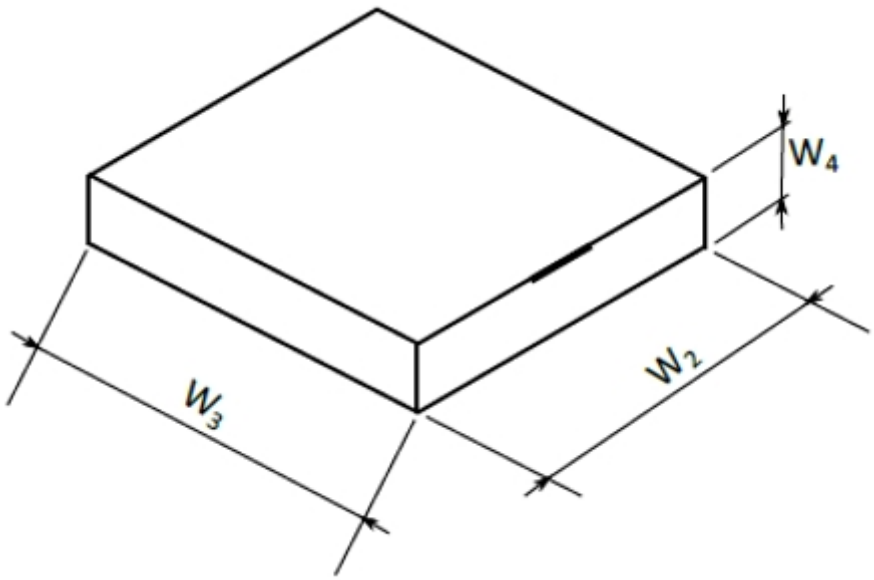

Symbol	Dimensions [mm]
W_2	368
W_3	338
W_4	72

10.5 Moisture Sensitivity Level

Reels are delivered in packing which conforms to MSL3 (Moisture Sensitivity Level 3) requirements.

11. Certifications

Certifications are ongoing for ARTIK 030. For a complete list of planned certifications and timelines, please contact your sales team.

12. Revision History

12.1 Revision 0.5

- Initial Publication

Legal Information

INFORMATION IN THIS DOCUMENT IS PROVIDED IN CONNECTION WITH THE SAMSUNG ARTIK™ DEVELOPMENT KIT AND ALL RELATED PRODUCTS, UPDATES, AND DOCUMENTATION (HEREINAFTER "SAMSUNG PRODUCTS"). NO LICENSE, EXPRESS OR IMPLIED, BY ESTOPPEL OR OTHERWISE, TO ANY INTELLECTUAL PROPERTY RIGHTS IS GRANTED BY THIS DOCUMENT. THE LICENSE AND OTHER TERMS AND CONDITIONS RELATED TO YOUR USE OF THE SAMSUNG PRODUCTS ARE GOVERNED EXCLUSIVELY BY THE SAMSUNG ARTIK™ DEVELOPER LICENSE AGREEMENT THAT YOU AGREED TO WHEN YOU REGISTERED AS A DEVELOPER TO RECEIVE THE SAMSUNG PRODUCTS. EXCEPT AS PROVIDED IN THE SAMSUNG ARTIK™ DEVELOPER LICENSE AGREEMENT, SAMSUNG ELECTRONICS CO., LTD. AND ITS AFFILIATES (COLLECTIVELY, "SAMSUNG") AND ITS SUPPLIERS ASSUME NO LIABILITY WHATSOEVER, INCLUDING WITHOUT LIMITATION CONSEQUENTIAL OR INCIDENTAL DAMAGES, AND SAMSUNG DISCLAIMS ANY EXPRESS OR IMPLIED WARRANTY, ARISING OUT OF OR RELATED TO YOUR SALE, APPLICATION AND/OR USE OF SAMSUNG PRODUCTS INCLUDING LIABILITY OR WARRANTIES RELATED TO FITNESS FOR A PARTICULAR PURPOSE, MERCHANTABILITY, OR INFRINGEMENT OF ANY PATENT, COPYRIGHT, OR OTHER INTELLECTUAL PROPERTY RIGHT.

SAMSUNG RESERVES THE RIGHT TO CHANGE PRODUCTS, INFORMATION, DOCUMENTATION AND SPECIFICATIONS WITHOUT NOTICE. THIS INCLUDES MAKING CHANGES TO THIS DOCUMENTATION AT ANY TIME WITHOUT PRIOR NOTICE. CHARACTERIZATION DATA, AVAILABLE MODULES AND PERIPHERALS, MEMORY SIZES AND MEMORY ADDRESSES REFER TO EACH SPECIFIC DEVICE, AND "TYPICAL" PARAMETERS PROVIDED CAN AND DO VARY IN DIFFERENT APPLICATIONS. THIS DOCUMENTATION IS PROVIDED FOR REFERENCE PURPOSES ONLY, AND ALL INFORMATION DISCUSSED HEREIN IS PROVIDED ON AN "AS IS" BASIS, WITHOUT WARRANTIES OF ANY KIND. SAMSUNG AND ITS SUPPLIERS ASSUME NO RESPONSIBILITY FOR POSSIBLE ERRORS OR OMISSIONS, OR FOR ANY CONSEQUENCES FROM THE USE OF THE DOCUMENTATION CONTAINED HEREIN.

Samsung Products are not intended for use in medical, life support, critical care, safety equipment, or similar applications where product failure could result in loss of life or personal or physical harm, or any military or defense application, or any governmental procurement to which special terms or provisions may apply. Samsung Products shall under no circumstances be used in weapons of mass destruction including (but not limited to) nuclear, biological or chemical weapons, or missiles capable of delivering such weapons.

This document and all information discussed herein remain the sole and exclusive property of Samsung. All brand names, trademarks and registered trademarks belong to their respective owners. For updates or additional information about Samsung ARTIK™, contact the Samsung ARTIK™ team via the Samsung ARTIK™ website at www.artik.io. Silicon Laboratories Inc.®, Silicon Labs®, SiLabs®, Simplicity Studio™, EFR32™, LEUART™ and others are trademarks or registered trademarks of Silicon Laboratories Inc. ARM and Cortex-M4 are trademarks or registered trademarks of ARM Holdings.

Copyright © 2016 Samsung Electronics Co., Ltd.
All rights reserved. No part of this publication may be reproduced, stored in a retrieval system, or transmitted in any form or by any means, electric or mechanical, by photocopying, recording, or otherwise, without the prior written consent of Samsung Electronics.

Samsung ARTIK™ Modules

Samsung
Semiconductor, Inc.
3655 N. First Street
San Jose, CA 95134
USA

artik.io